EXPLODED PARTS LIST

Year: 2018

Villy 6000 E

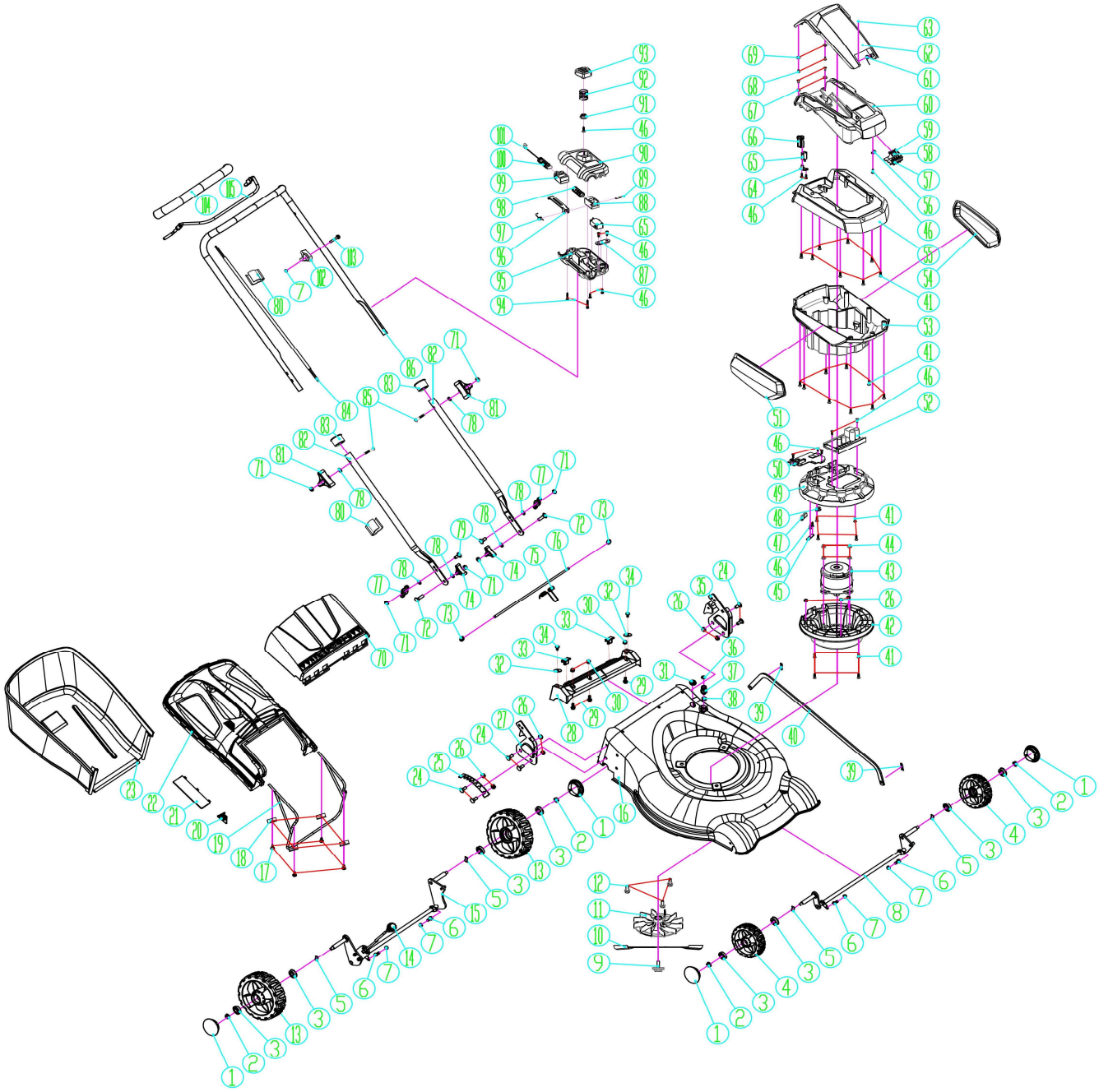

EXPLODED PARTS LIST

Year: 2018

Villy 6000 E

No	Code	Name	Qty	No	Code	Name	Qty
1	52183	Outer cover of hub		88	52214	Switch assembly	
2	52184	Hexagon locking nut		89			
3	52185	Bearing		90			
4	52186	Wheel assembly		91			
8	40434	Front drive assy		92			
9	52187	Bolt with plastic head		93			
11	52188	Blade		94			
12	52189	Plastic blade adapter		95			
13	52190	Wheel assembly		96			
14	52191	Adjustment handle ball		97			
15	40436	Rear drive assy		98			
16	40427	Deck		99			
19	40439	Plastic top frame		100			
22	40438	Top of grass box		101			
23	52192	Fabric grass bag		105	52215	Starting pulling road	
27	52193	Right handle bracket					
28	52194	The base of rear discharge cover			46571	Charger	
35	52195	Left handle bracket			46570	Battery 40V 4Ah	
42	52196	Motor adapter			50792	Battery 40V 6Ah	
43	52197	Electrical motor assembly					
47	52198	Line plug					
49	52199	Lower cover base					
50	52200	Controller assy					
51	52201	Decorative cover-right					
53	52202	Lower cover					
54	52203	Decorative cover-left					
55	52204	Upper cover					
57	52205	Battery connector					
58							
59							
60	52206	Battery holder					
61	52207	Transparent cover spring					
62	52208	Transparent cover					
65	52209	Micro switch					
66	52210	Key					
70	40437	Rear discharge cover					
75	25834	Rear discharge cover spring					
82	52211	Lower handrail					
84	52212	Cable conductor					
86	52213	Upper handrail					