EXPLODED PARTS LIST

Year: 2021

VFP 2300

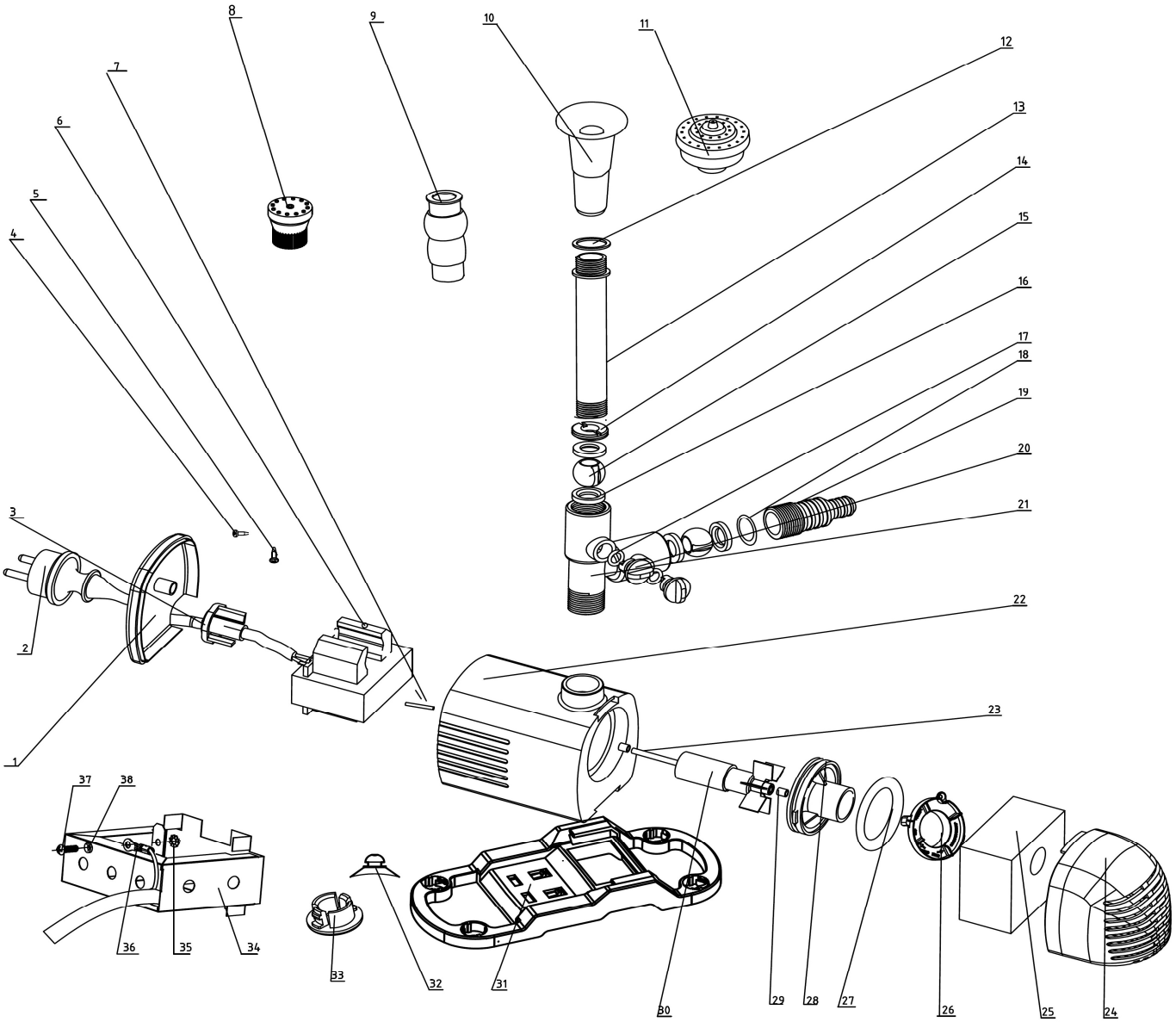

EXPLODED PARTS LIST

Year: 2021

VFP 2300

No	Code	Name	Qty	No	Code	Name	Qty
1	59620	The front cover	1				
2	59632	power cable	1				
3		Cable socket	1				
4		Slotted countersunk head tapping screw	2				
5		Cross recessed pan head tapping screws	1				
6	59611	stator	1				
7	59629	Stud	1				
8	59635	P222 nozzle	1				
9	59636	P320 nozzle	1				
10	59637	P220 nozzle	1				
11	59638	P120 nozzle	1				
12	59624	Seal	1				
13	59634	Output tube	1				
14	59633	Tightening screw	1				
15	59616	Spool	2				
16	59623	Gasket	4				
17	59627	O-ring	2				
18	59626	O-ring	1				
19	59622	Connector	1				
20	59630	Knob	2				
21	59631	Three-way connector	1				
22	59612	Main pump casing	1				
23	59618	Porcelain shaft	1				
24	59621	Back cover	1				
25	59617	filter sponge	1				
26	59615	Impeller gland	1				
27	59628	O-ring	1				
28	59614	Impeller cover	1				
29	59625	Shaft cap	2				
30	59619	Rotor piece	1				
31	59613	Base	1				
32		Suction cup	4				
33		Base decorative cover	4				
34		58W aluminum shell	1				
35		External tooth gasket	1				
36		Grounding piece	1				
37		Screw	1				
38		Spring pad	1				
		Epoxy resin (black 5:1)	0.204				