PARTS CATALOG

TOP HANDLE SAW
CS-2510TES(37)25C

37000001 -

P014-005320-15I

1. CYLINDER, PISTON, CRANKSHAFT

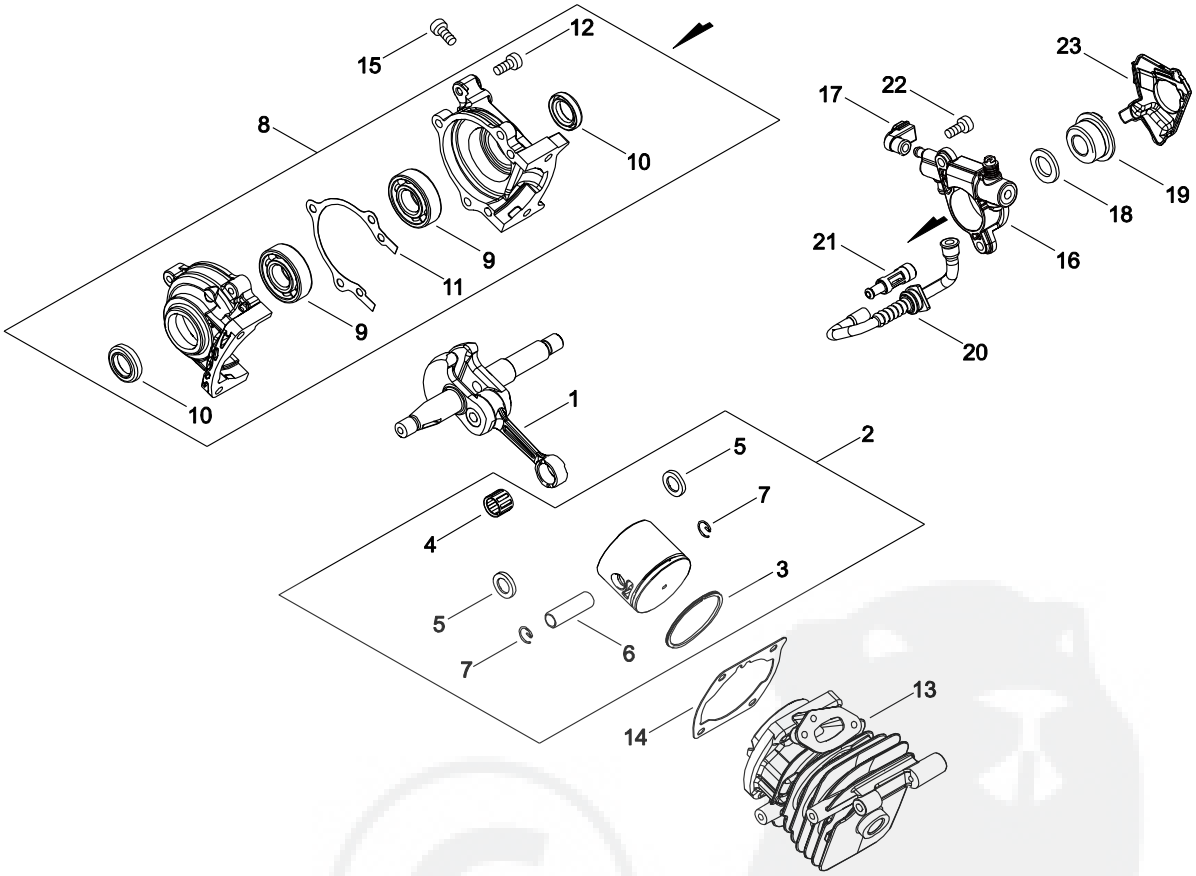

KEY	LV	PART NUMBER	Q'TY	DESCRIPTION	REMARKS	NOTE1	NOTE2
1		A011-001440	1	CRANKSHAFT,ASM			
2		P021-050120	1	PISTON KIT			
3	+	A101-000700	1	RING, PISTON			
4	+	V553-000020	1	BEARING,NEEDLE 8	KBK8X11X8.8X4		
5	+	100014-55930	2	SPACER, PISTON PIN			
6	+	V606-000020	1	PIN,ENG 8	5.8*8*25.5		
7	+	100015-04630	2	CIRCLIP, PISTON PIN			
8		P021-050130	1	CRANKCASE SET			
9	+	900800-36001	2	BEARING, BALL 6001	6001/C3		
10	+	V505-000070	2	OIL SEAL			
11	+	V102-000290	1	GASKET,CRANKCASE			
12	+	V804-000100	3	BOLT, TORX 4	TB-4*16 12.9		
13		P021-050210	1	CYLINDER			
14		V100-000830	1	GASKET,CYL			
15		V804-000100	4	BOLT, TORX 4	TB-4*16 12.9		
16		C022-000210	1	AUTO-OILER ASSEMBLY			
17		V470-002170	1	PIPE			
18		V308-000030	1	WASHER,CIRCULAR 11	10.5*17.4*1.8		
19		V652-000230	1	GEAR,WORM			
20		V470-002200	1	PIPE			
21		P021-050140	1	STRAINER, OIL ASY			
22		V804-000050	2	BOLT, TORX 4	TB-4*12 10.9		
23		C236-000150	1	COVER,OILER			

2. ENGINE COVER

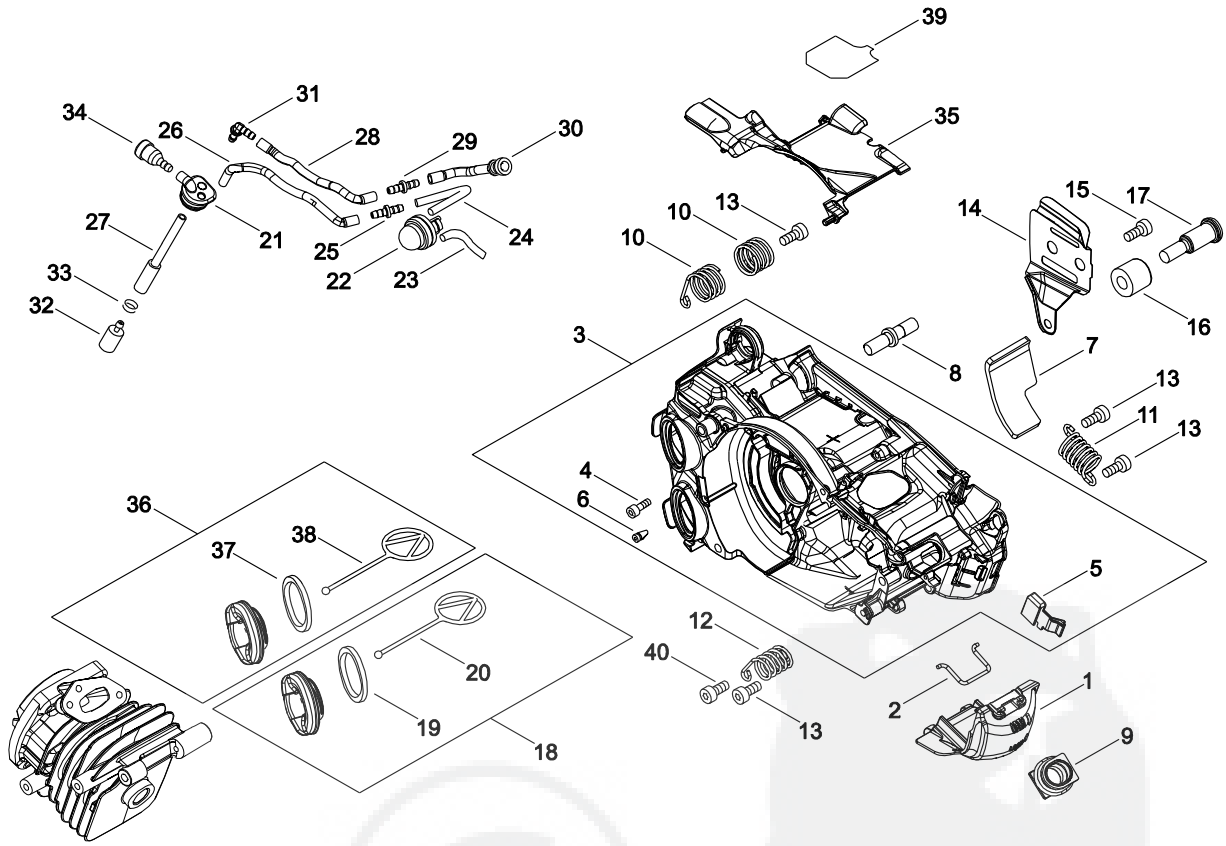

KEY	LV	PART NUMBER	Q'TY	DESCRIPTION	REMARKS	NOTE1	NOTE2
1		A429-000200	1	COVER,CAP			
2		C649-000440	1	HOOK			
3		P021-050150	1	COVER ENGINE ASY			
4	+	V804-000060	3	BOLT, TORX 4	TB-4*16 10.9		
5	+	A219-000070	1	SHUTTER, AIR			
6	+	436114-13930	1	VALVE, CHECK			
7		V341-000200	1	WASHER,SQUARE			
8		V225-000262	1	BOLT,STUD 8			
9		A239-000110	1	PIPE, INTAKE			
10		V450-002050	2	SPRING,COMPRESSION			
11		V450-002060	1	SPRING,COMPRESSION			
12		V450-002070	1	SPRING,COMPRESSION			
13		V804-000000	4	BOLT, TORX 4	TT-4*12 DG 10.9		
14		C305-000490	1	PLATE,SPROCKET GUARD			
15		V203-002280	1	BOLT,5			
16		C310-000140	1	CATCHER, CHAIN			
17		V203-002260	1	BOLT,5			
18		A033-000390	1	CAP,FUEL			
19	+	V107-000090	1	GASKET			
20	+	A365-000050	1	CONNECTOR,CAP			
21		V137-000140	1	GROMMET,FUEL			
22		123181-39130	1	PUMP, PRIMER			
23		V470-002180	1	PIPE			
24		V471-004870	1	PIPE			

2. ENGINE COVER

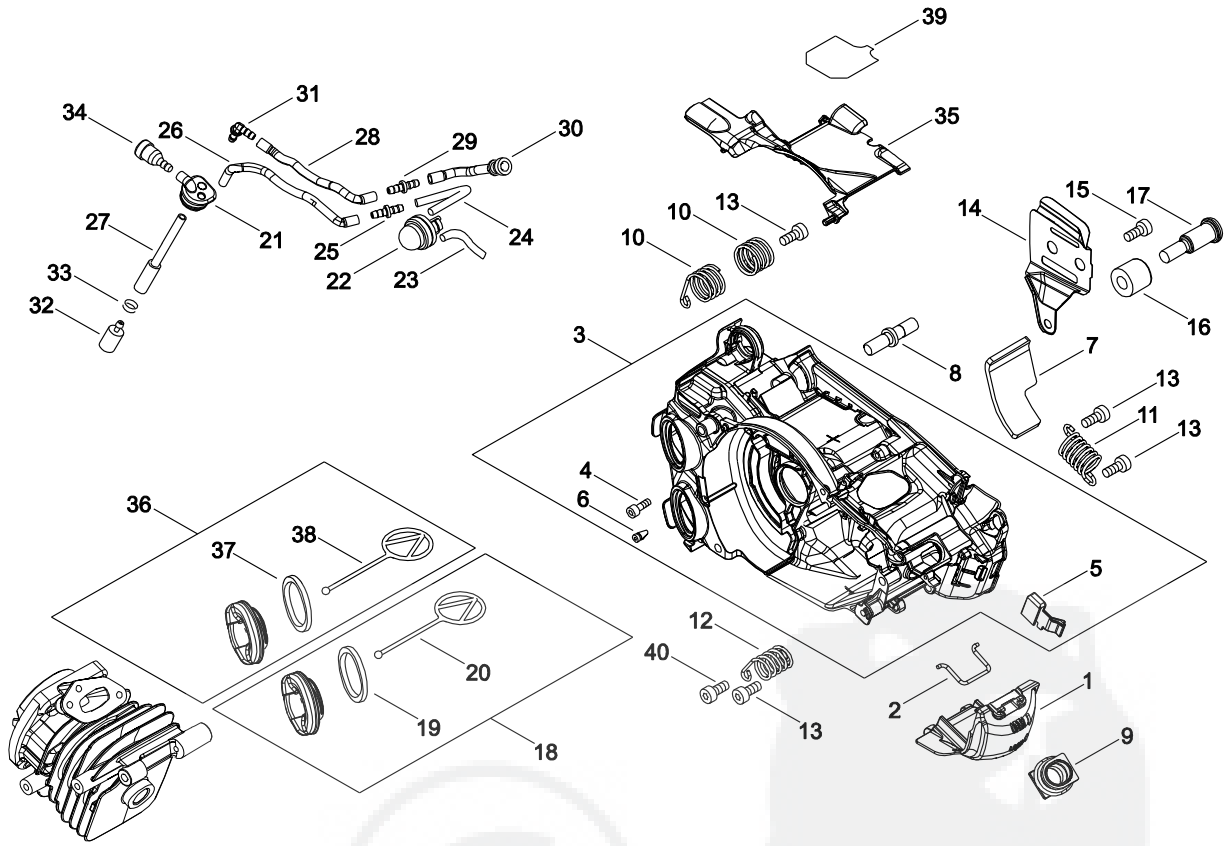

KEY	LV	PART NUMBER	Q'TY	DESCRIPTION	REMARKS	NOTE1	NOTE2
25		V186-000020	1	JOINT,PIPE			
26		V471-003660	1	PIPE			
27		V470-002210	1	PIPE			
28		V471-003820	1	PIPE	3*5*95		
29		V186-000510	1	JOINT,PIPE			
30		V470-002190	1	PIPE			
31		V186-000530	1	JOINT,PIPE			
32		A369-000420	1	STRAINER, FUEL	ES-16499		
33		V490-000500	1	CLIP			
34		131300-56431	1	VENT ASSEMBLY, FUEL			
35		A127-000450	1	COVER,DUST			
36		A033-000410	1	CAP,FUEL			
37	+	V107-000090	1	GASKET			
38	+	A365-000050	1	CONNECTOR,CAP			
39		X505-008600	1	LABEL,CAUTION			
40		V804-000010	1	BOLT, TORX 4	TT-4*16 DG 10.9		

3. MAGNETO

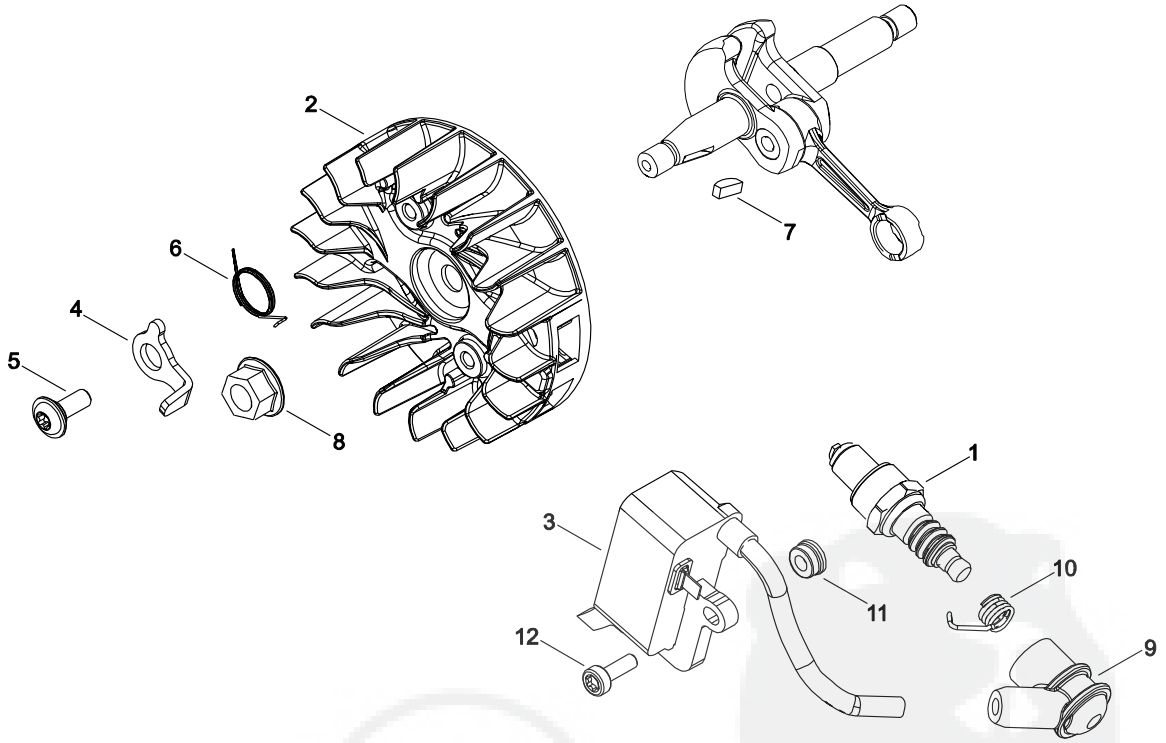

KEY	LV	PART NUMBER	Q'TY	DESCRIPTION	REMARKS	NOTE1	NOTE2
1		A425-000060	1	SPARKPLUG			
2		A409-001300	1	ROTOR, MAGNETO			
3		P021-050160	1	COIL, IGNITION			
4		A514-000300	2	PAWL			
5		V203-002250	2	BOLT,5			
6		V452-000030	2	SPRING,TORSION			
7		100142-12330	1	KEY, WOODRUFF			
8		V265-000140	1	NUT			
9		A427-000190	1	CAP,SPARK PLUG			
10		A426-000010	1	TERMINAL,SPARKPLUG			
11		V352-000300	2	COLLAR,4			
12		V804-000060	2	BOLT, TORX 4	TB-4*16 10.9		

4. AIR CLEANER, CARBURETOR

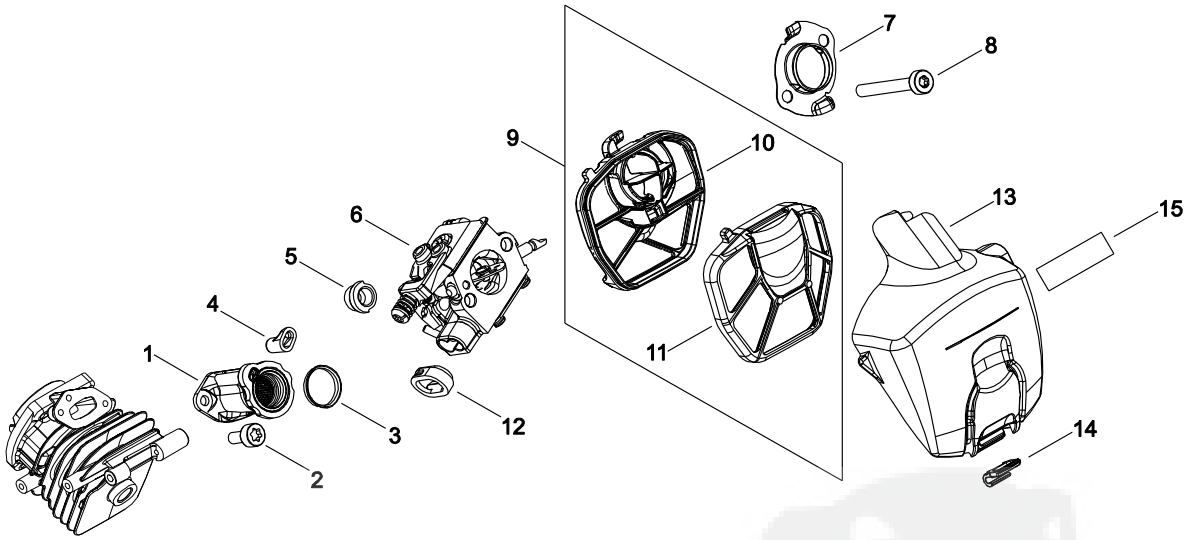

KEY	LV	PART NUMBER	Q'TY	DESCRIPTION	REMARKS	NOTE1	NOTE2
1		A202-000290	1	BELLOWS, INTAKE			
2		V804-000040	2	BOLT, TORX 4	TB-4*10 10.9		
3		V358-000220	1	COLLAR,14			
4		V351-000030	1	COLLAR,3			
5		V162-000770	2	PLUG			
6		A021-004520	1	CARBURETOR,DIAPHRAGM	WT/EX-4353F		
7		A204-000250	1	ELBOW, CARBURETOR			
8		V805-000070	2	BOLT, TORX 5	TB-5*40 10.9		
9		A226-001960	1	ELEMENT,AIR FILTER			
10	+	A226-001930	1	ELEMENT, AIR FILTER			
11	+	A226-001940	1	ELEMENT, AIR FILTER			
12		V131-000220	1	GROMMET,NEEDLE			
13		A232-001840	1	LID,CLEANER			
14		A235-000410	1	KNOB,CLEANER LID			
15		X503-013600	1	LABEL,MODEL			

5. CARBURETOR

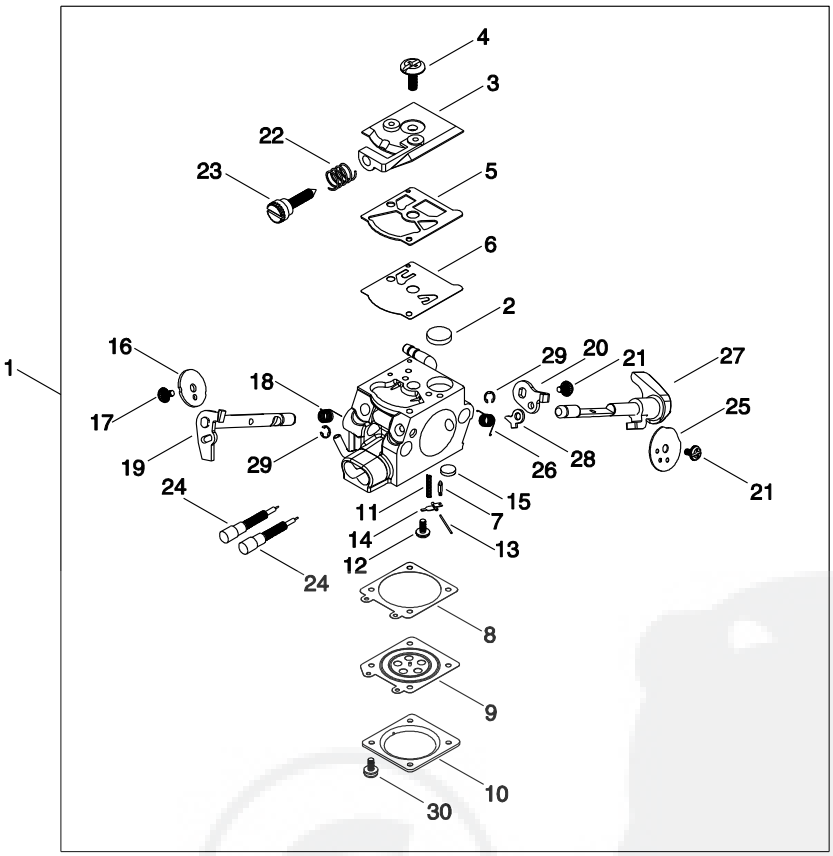

KEY	LV	PART NUMBER	Q'TY	DESCRIPTION	REMARKS	NOTE1	NOTE2
1		A021-004520	1	CARBURETOR,DIAPHRAGM	WT/EX-4353F		
2	+	123126-10631	1	SCREEN, INLET			
3	+	123124-02960	1	COVER, FUEL PUMP			
4	+	123110-03930	1	SCREW, PUMP COVER			
5	+	123125-15030	1	GASKET, FUEL PUMP			
6	+	123112-15030	1	DIAPHRAGM, FUEL PUMP			
7	+	123137-19830	1	VALVE, INLET NEEDLE			
8	+	123140-27230	1	GASKET,M. DIAPHRAGM			
9	+	P003-001850	1	DIAPHRAGM, METERING			
10	+	123142-03930	1	COVER, M. DIAPHRAGM			
11	+	123122-39830	1	SPRING, METER. LEVER			
12	+	123139-03930	1	SCREW, M. LEVER PIN			
13	+	123138-03930	1	PIN, METERING LEVER			
14	+	123123-03930	1	LEVER, METERING			
15	+	123146-10631	1	PLUG, WELCH			
16	+	P003-005750	1	VALVE, THROTTLE			
17	+	P003-002380	1	SCREW			
18	+	123113-37530	1	SPRING, THROTTLE RTN			
19	+	P003-001300	1	SHAFT, THROTTLE			
20	+	P003-000380	1	THROTTLE, LEVER			
21	+	123114-38830	2	SCREW			
22	+	123133-04260	1	SPRING, IDLE ADJUST			
23	+	123134-04260	1	SCREW, IDLE ADJUST			
24	+	P003-004190	2	NEEDLE			
25	+	P003-000410	1	VALVE CHOKE			

5. CARBURETOR

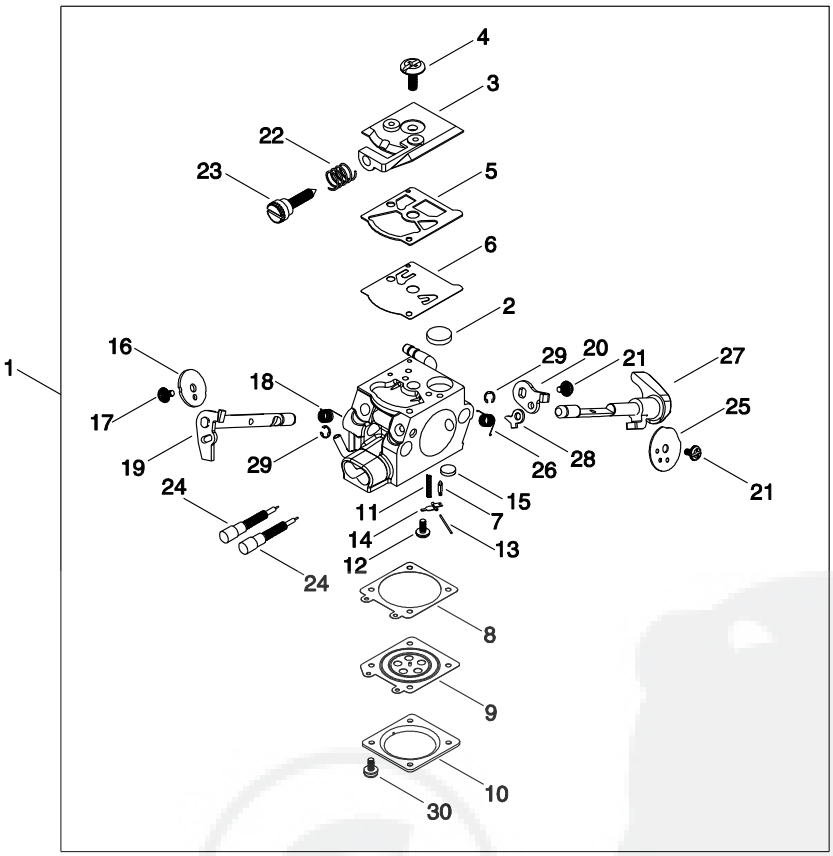

KEY	LV	PART NUMBER	Q'TY	DESCRIPTION	REMARKS	NOTE1	NOTE2
26	+	P003-004780	1	SPRING			
27	+	P003-005760	1	SHAFT-CHOKE			
28	+	P003-001510	1	LEVER-FAST IDLE			
29	+	123127-15030	2	RING			
30	+	123130-02960	4	SCREW			

6. MUFFLER

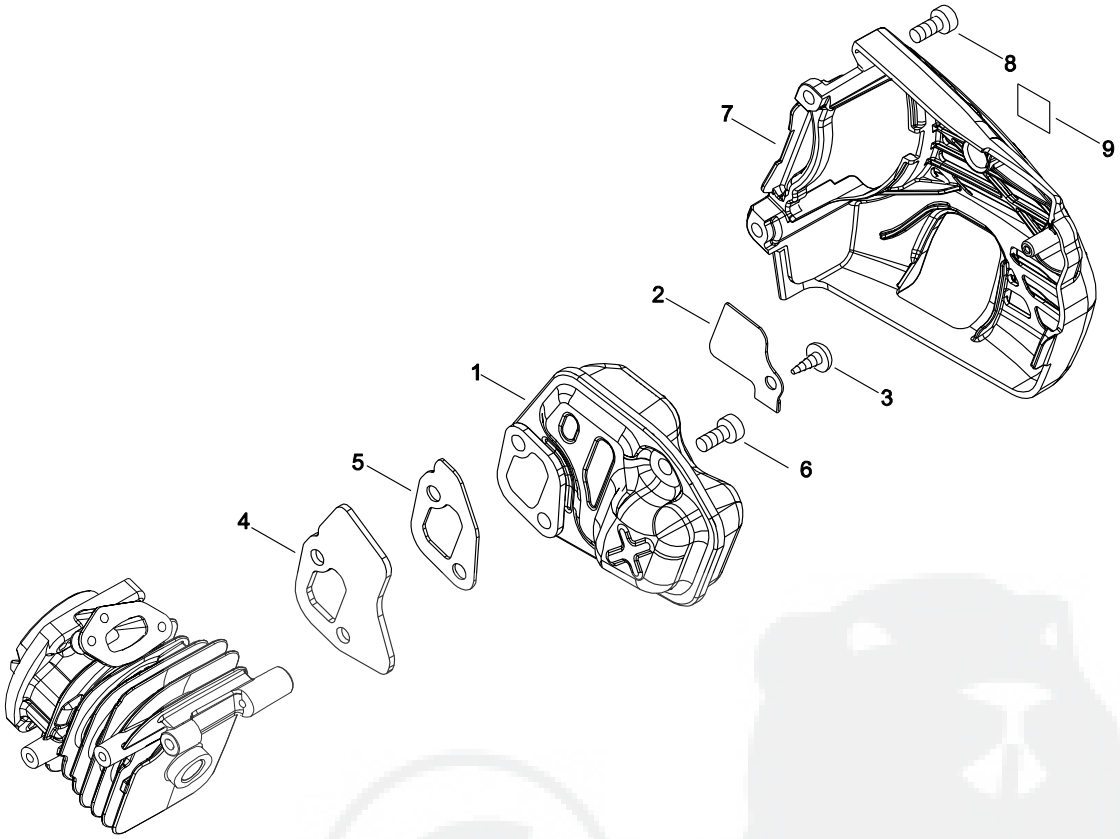

KEY	LV	PART NUMBER	Q'TY	DESCRIPTION	REMARKS	NOTE1	NOTE2
1		A030-000840	1	MUFFLER ASY			
2		A310-000490	1	SCREEN, ARRESTOR			
3		V252-000970	1	SCREW,4	4*8		
4		A312-000090	1	PLATE, EXHUST			
5		V104-002290	1	GASKET,EXHAUST			
6		V805-000150	3	BOLT, TORX 5	TB-5*16 10.9		
7		A320-001160	1	COVER,MUFFLER			
8		V804-000000	2	BOLT, TORX 4	TT-4*12 DG 10.9		
9		X505-007710	1	LABEL,CAUTION			

7. RECOIL STARTER

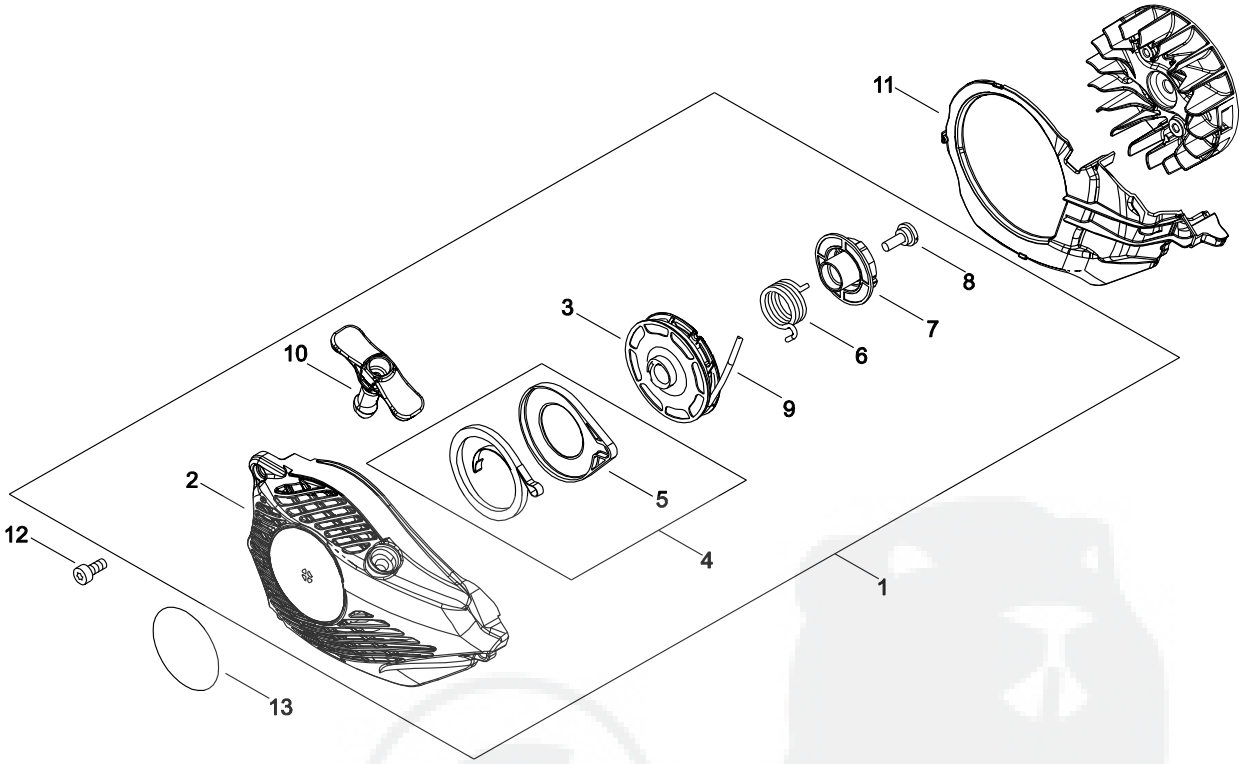

KEY	LV	PART NUMBER	Q'TY	DESCRIPTION	REMARKS	NOTE1	NOTE2
1		A051-003130	1	STARTER,RECOIL ASY			
2	+	P022-040040	1	CASE,STARTER ASY			
3	+	P022-040050	1	DRUM			
4	+	P022-040060	1	SPRING KIT, REWIND			
5	++	P022-040070	1	SPRING CASE			
6	+	P022-036670	1	SPRING,DAMPER			
7	+	P022-040080	1	PLATE, CAM			
8	+	177236-61830	1	SCREW			
9	+	P022-040090	1	ROPE, STARTER			
10	+	P022-040100	1	GRIP, STARTER			
11		A172-003030	1	COVER,FAN			
12		V804-000060	3	BOLT, TORX 4	TB-4*16 10.9		
13		X502-001030	1	LABEL,ECHO			

8. HANDLE

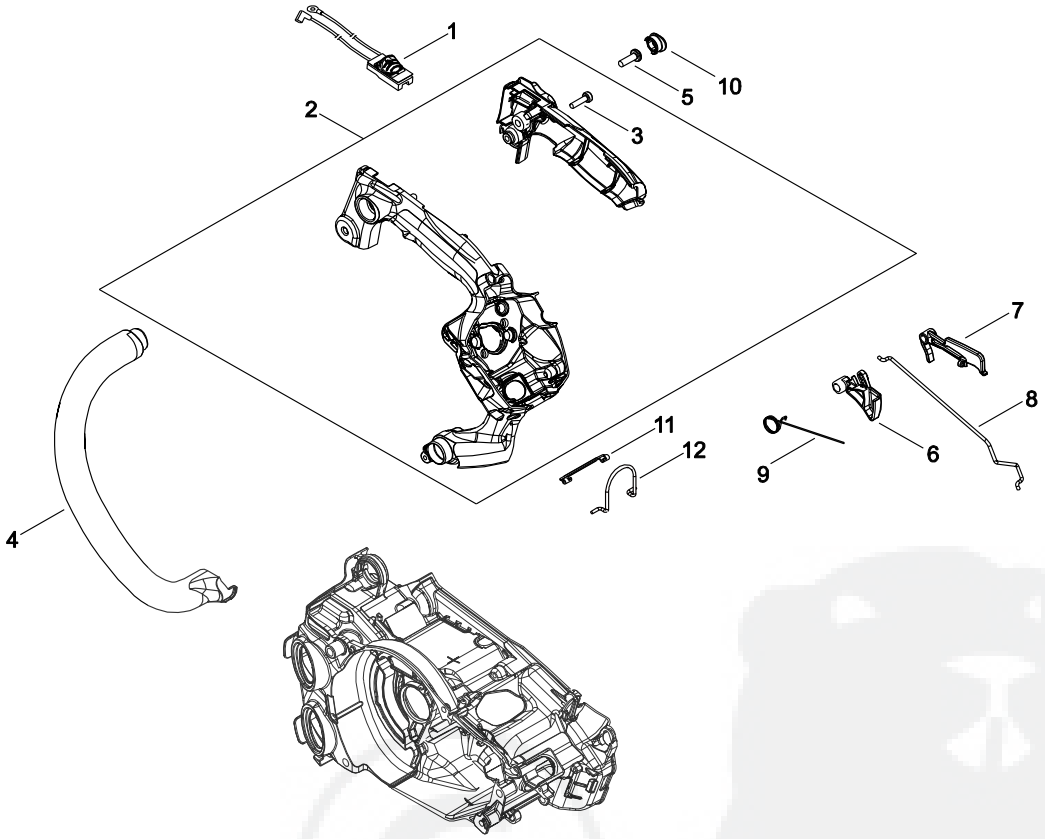

KEY	LV	PART NUMBER	Q'TY	DESCRIPTION	REMARKS	NOTE1	NOTE2
1		A440-002740	1	SWITCH,ON OFF			
2		P021-050170	1	HANDLE SET, REAR			
3	+	V804-000010	1	BOLT, TORX 4	TT-4*16 DG 10.9		
4		C400-001550	1	HANDLE, FRONT			
5		V805-000000	1	BOLT, TORX 5	TT-5*16 DG 10.9		
6		C450-000950	1	CONTROL, THROTTLE			
7		C460-000590	1	LOCKOUT, THROTTLE			
8		C454-000540	1	ROD, THROTTLE			
9		V452-001650	1	SPRING,TORSION			
10		V162-000760	1	PLUG			
11		C626-000090	1	FIXTURE, HARNESS			
12		C646-000130	1	RING, HARNESS			

9. CHAIN BRAKE

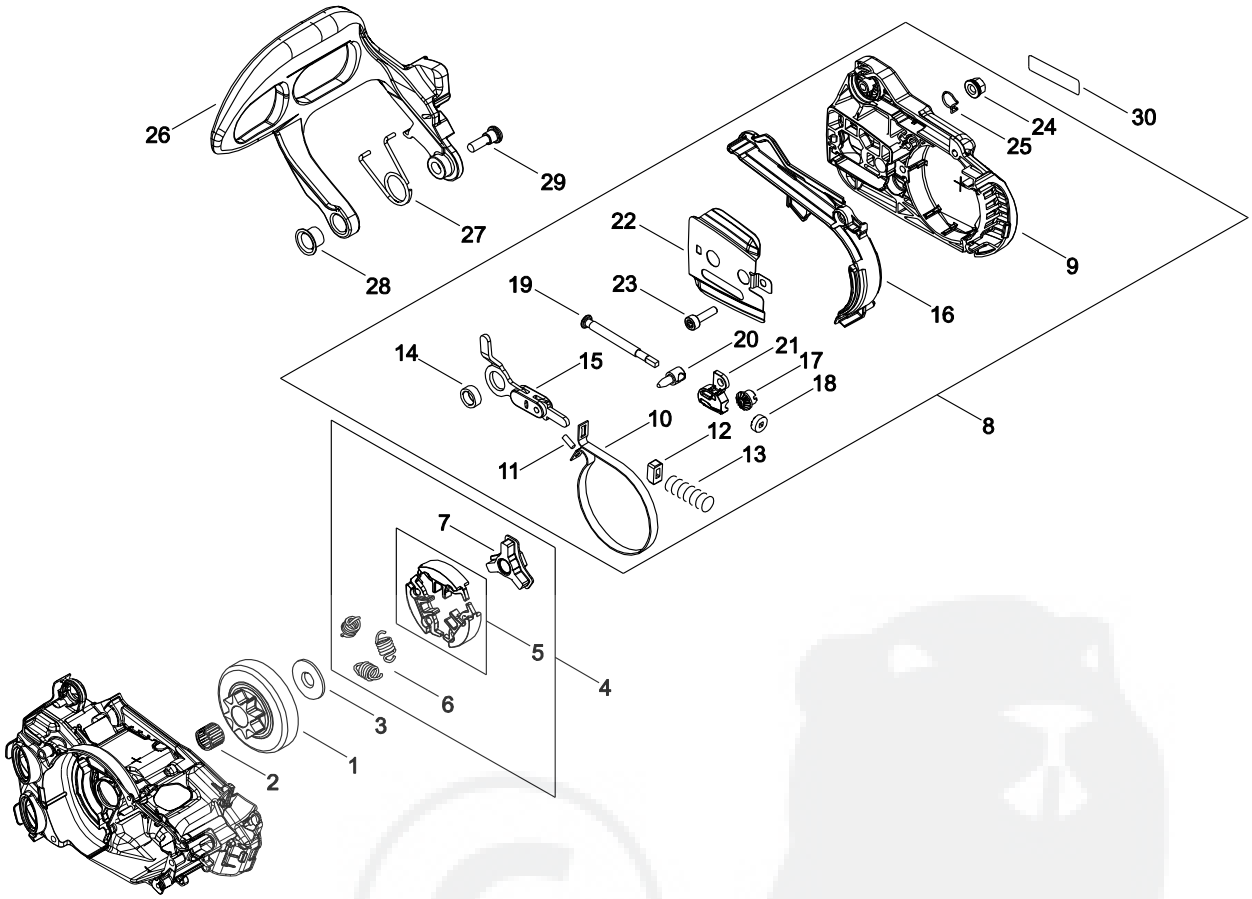

KEY	LV	PART NUMBER	Q'TY	DESCRIPTION	REMARKS	NOTE1	NOTE2
1		A556-001710	1	DRUM, CLUTCH			
2		V555-000190	1	BEARING,NEEDLE 10			
3		A551-000170	1	PLATE, CLUTCH			
4		A056-000800	1	CLUTCH ASY			
5	+	P021-050190	1	CLUTCH SHOE SET			
6	+	A566-000290	3	SPRING, CLUTCH			
7	+	A552-000430	1	HUB, CLUTCH			
8		P021-050200	1	BRAKE,ASM CHAIN			
9	+	C300-001110	1	GUARD, SPROCKET			
10	+	C328-000330	1	BAND, BRAKE			
11	+	93050-30080	1	ROLLER			
12	+	V376-000450	1	SPACER			
13	+	V450-002080	1	SPRING,COMPRESSION			
14	+	V355-000860	1	COLLAR,8			
15	+	C334-000340	1	CONNECTOR, BRAKE			
16	+	C345-000640	1	COVER,BRAKE			
17	+	V651-001060	1	GEAR,BEVEL			
18	+	V651-000011	1	GEAR,BEVEL			
19	+	V203-000041	1	BOLT,5			
20	+	C309-000110	1	TENSIONER,CHAIN			
21	+	V355-000840	1	COLLAR,8			
22	+	C305-000500	1	PLATE,SPROCKET GUARD			
23	+	V804-000000	3	BOLT, TORX 4	TT-4*12 DG 10.9		
24	+	V265-000550	1	NUT,8			

9. CHAIN BRAKE

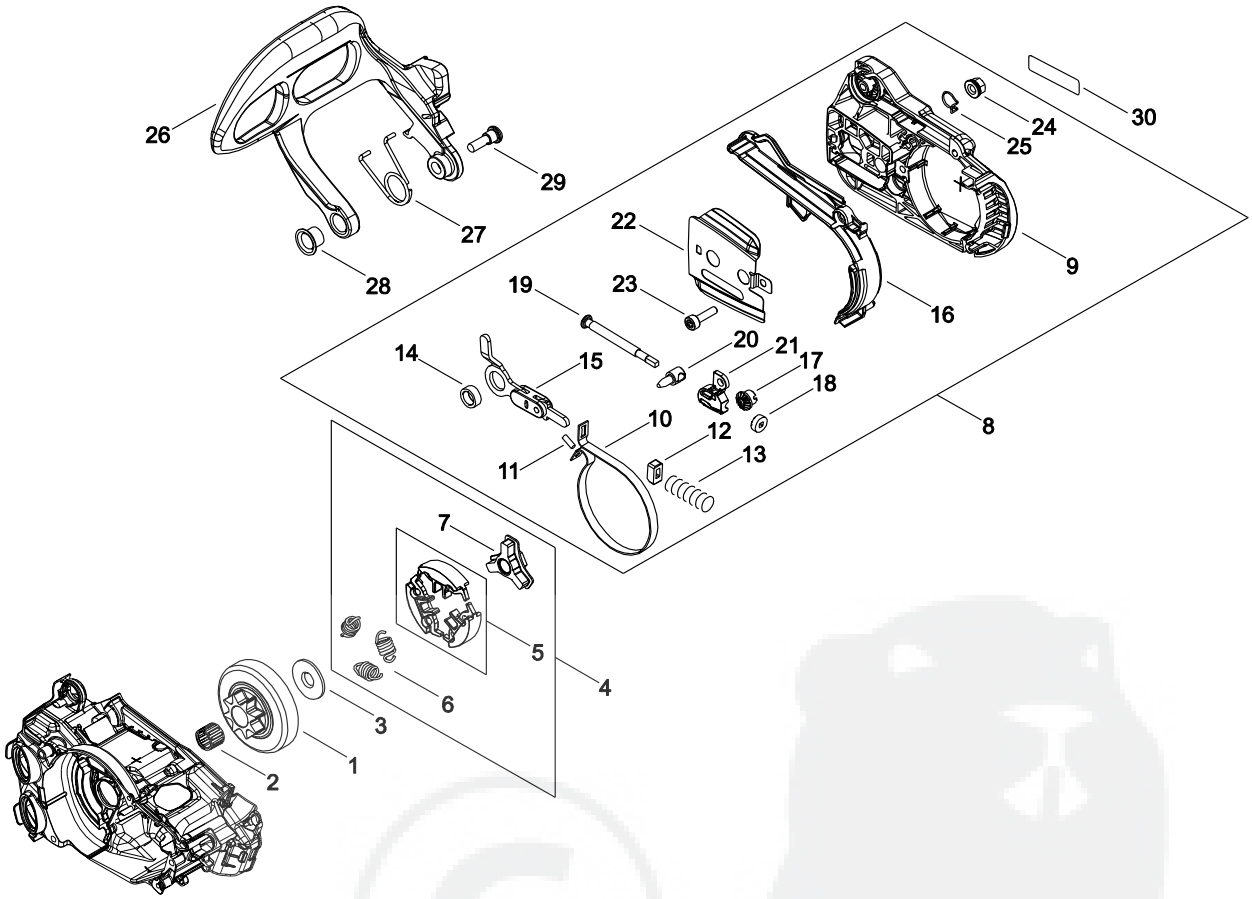

KEY	LV	PART NUMBER	Q'TY	DESCRIPTION	REMARKS	NOTE1	NOTE2
25	+	C649-000420	1	HOOK			
26		C320-000510	1	LEVER, BRAKE			
27		V452-001660	1	SPRING,TORSION			
28		V356-000780	1	COLLAR,10			
29		V203-002270	1	BOLT,5			
30		X502-000340	1	LABEL,ECHO	ECHO(WHITE)		

10. ACCESSORIES

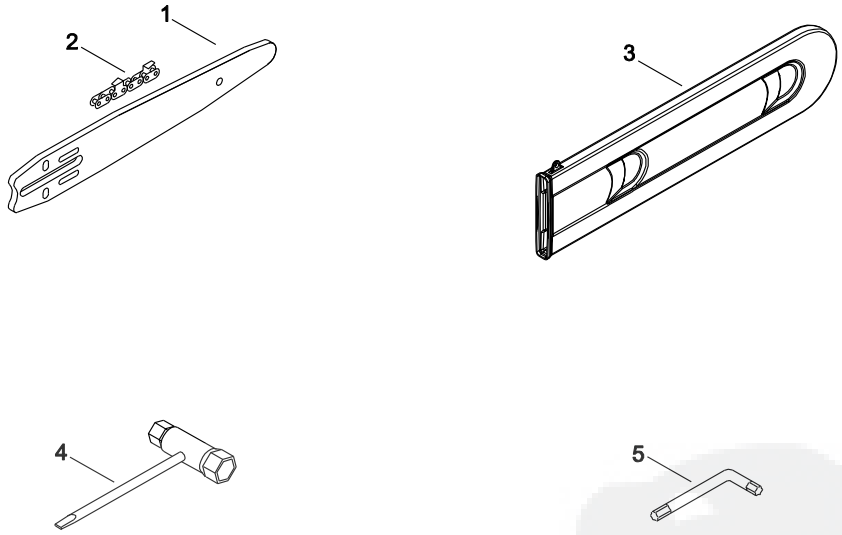

KEY	LV	PART NUMBER	Q'TY	DESCRIPTION	REMARKS	NOTE1	NOTE2
1		X101-000011	1	BAR,GUIDE 25			
2		431610-10030	1	CHAIN, SAW	25AP-60E		
3		X490-000840	1	SCABBARD,CHAIN			
4		X602-000160	1	PLUG WRENCH			
5		X605-000170	1	TOOL,L WRENCH			

11. AUTO-OILER

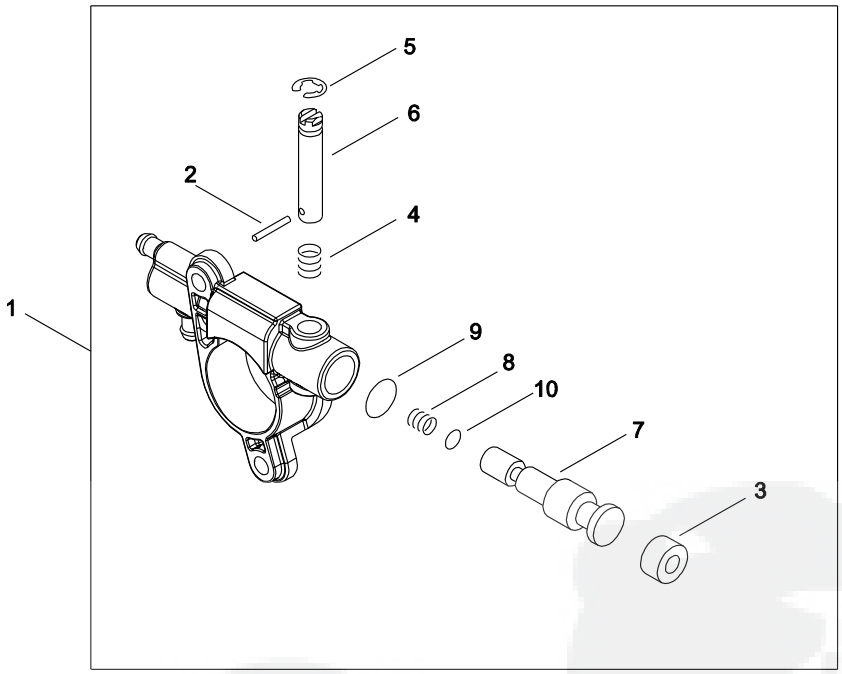

KEY	LV	PART NUMBER	Q'TY	DESCRIPTION	REMARKS	NOTE1	NOTE2
1		C022-000210	1	AUTO-OILER ASSEMBLY			
2	+	P003-002180	1	PIN, SPRING			
3	+	437062-38330	1	CAP, OIL PUMP			
4	+	437015-37330	1	SPRING			
5	+	123127-15030	1	RING			
6	+	P003-005430	1	NEEDLE-ADJ			
7	+	P003-005770	1	SHAFT ASY-PLUNGER			
8	+	P003-005780	1	SPRING			
9	+	P003-005420	1	WASHER			
10	+	P003-005790	1	WASHER			

12. GUIDE BAR, CHAIN

Pitch ピッチ (inch) (mm)	Gauge ゲージ (inch) (mm)	Length 長 さ (cm)	Guide Bar ガイドバー		Saw Chain ソーチエン		Hard Nose ハード ノーズ	Sprocket Nose スプロケット ノーズ
			Key №	Type 形 式	Key №	Type 形 式		
1/4 6.35	0.050 1.27	20	A1	C20H25-52CL- ED	A2	25AP-52E	●	
1/4 6.35	0.050 1.27	25	B1	C25H25-60CL- ET	B2	25AP-60E	●	
3/8 9.53	0.050 1.27	20	C1	20RC50S-3/8	C2	91PX-35E		●
3/8 9.53	0.050 1.27	25	D1	25RC50S-3/8	D2	91PX-40E		●
3/8 9.53	0.050 1.27	30	E1	30RC50M-3/8ECHO	E2	91PX-47E		●

KEY	LV	PART NUMBER	Q'TY	DESCRIPTION	REMARKS	NOTE1	NOTE2
A1		X100-000060	1	BAR,GUIDE 20	C20H25-52CL- ED		
A2		X200-000000	1	CHAIN,SAW	25AP-52E		
B1		X101-000011	1	BAR,GUIDE 25			
B2		431610-10030	1	CHAIN, SAW	25AP-60E		
C1		X120-000020	1	BAR,GUIDE20RC50S-3/8	20RC50S-3/8		
C2		X220-000020	1	CHAIN,SAW	91PX-35E		
D1		X121-000002	1	BAR,GUIDE25RC50S-3/8	25RC50S-3/8		
D2		X221-000100	1	CHAIN,SAW	91PX-40E		
E1		X122-000072	1	BAR,GUIDE 30	30RC50M-3/8 ECHO		
E2		X222-000140	1	CHAIN,SAW	91PX-47E		

13. OPTION PARTS

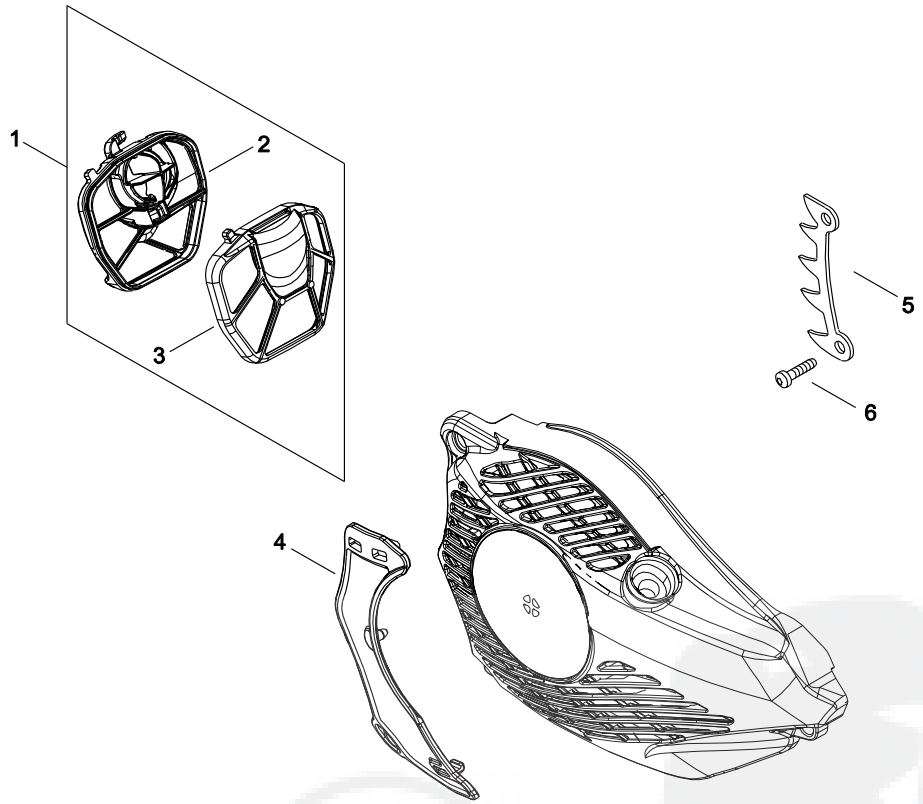

KEY	LV	PART NUMBER	Q'TY	DESCRIPTION	REMARKS	NOTE1	NOTE2
1		A226-001990	1	ELEMENT, AIR FILTER			
2	+	A226-001970	1	ELEMENT, AIR FILTER			
3	+	A226-001980	1	ELEMENT, AIR FILTER			
4		C418-000150	1	SHIELD, SNOW			
5		C304-000000	1	SPIKE			
6		V805-000240	2	BOLT, TORX 5	TT-5*12 DG 10.9		

Index

Patrs Number	Key No.
100014-55930	1 - 5
100015-04630	1 - 7
100142-12330	3 - 7
123110-03930	5 - 4
123112-15030	5 - 6
123113-37530	5 - 18
123114-38830	5 - 21
123122-39830	5 - 11
123123-03930	5 - 14
123124-02960	5 - 3
123125-15030	5 - 5
123126-10631	5 - 2
123127-15030	5 - 29
123127-15030	11 - 5
123130-02960	5 - 30
123133-04260	5 - 22
123134-04260	5 - 23
123137-19830	5 - 7
123138-03930	5 - 13
123139-03930	5 - 12
123140-27230	5 - 8
123142-03930	5 - 10
123146-10631	5 - 15
123181-39130	2 - 22
131300-56431	2 - 34
177236-61830	7 - 8
431610-10030	10 - 2
431610-10030	12 - B2
436114-13930	2 - 6
437015-37330	11 - 4
437062-38330	11 - 3
900800-36001	1 - 9
93050-30080	9 - 11
A011-001440	1 - 1
A021-004520	4 - 6
A021-004520	5 - 1
A030-000840	6 - 1
A033-000390	2 - 18
A033-000410	2 - 36
A051-003130	7 - 1
A056-000800	9 - 4
A101-000700	1 - 3
A127-000450	2 - 35
A172-003030	7 - 11
A202-000290	4 - 1
A204-000250	4 - 7
A219-000070	2 - 5
A226-001930	4 - 10
A226-001940	4 - 11

Patrs Number	Key No.
A226-001960	4 - 9
A226-001970	13 - 2
A226-001980	13 - 3
A226-001990	13 - 1
A232-001840	4 - 13
A235-000410	4 - 14
A239-000110	2 - 9
A310-000490	6 - 2
A312-000090	6 - 4
A320-001160	6 - 7
A365-000050	2 - 20
A365-000050	2 - 38
A369-000420	2 - 32
A409-001300	3 - 2
A425-000060	3 - 1
A426-000010	3 - 10
A427-000190	3 - 9
A429-000200	2 - 1
A440-002740	8 - 1
A514-000300	3 - 4
A551-000170	9 - 3
A552-000430	9 - 7
A556-001710	9 - 1
A566-000290	9 - 6
C022-000210	1 - 16
C022-000210	11 - 1
C236-000150	1 - 23
C300-001110	9 - 9
C304-000000	13 - 5
C305-000490	2 - 14
C305-000500	9 - 22
C309-000110	9 - 20
C310-000140	2 - 16
C320-000510	9 - 26
C328-000330	9 - 10
C334-000340	9 - 15
C345-000640	9 - 16
C400-001550	8 - 4
C418-000150	13 - 4
C450-000950	8 - 6
C454-000540	8 - 8
C460-000590	8 - 7
C626-000090	8 - 11
C646-000130	8 - 12
C649-000420	9 - 25
C649-000440	2 - 2
P003-000380	5 - 20
P003-000410	5 - 25
P003-001300	5 - 19

Patrs Number	Key No.
P003-001510	5 - 28
P003-001850	5 - 9
P003-002180	11 - 2
P003-002380	5 - 17
P003-004190	5 - 24
P003-004780	5 - 26
P003-005420	11 - 9
P003-005430	11 - 6
P003-005750	5 - 16
P003-005760	5 - 27
P003-005770	11 - 7
P003-005780	11 - 8
P003-005790	11 - 10
P021-050120	1 - 2
P021-050130	1 - 8
P021-050140	1 - 21
P021-050150	2 - 3
P021-050160	3 - 3
P021-050170	8 - 2
P021-050190	9 - 5
P021-050200	9 - 8
P021-050210	1 - 13
P022-036670	7 - 6
P022-040040	7 - 2
P022-040050	7 - 3
P022-040060	7 - 4
P022-040070	7 - 5
P022-040080	7 - 7
P022-040090	7 - 9
P022-040100	7 - 10
V100-000830	1 - 14
V102-000290	1 - 11
V104-002290	6 - 5
V107-000090	2 - 19
V107-000090	2 - 37
V131-000220	4 - 12
V137-000140	2 - 21
V162-000760	8 - 10
V162-000770	4 - 5
V186-000020	2 - 25
V186-000510	2 - 29
V186-000530	2 - 31
V203-000041	9 - 19
V203-002250	3 - 5
V203-002260	2 - 17
V203-002270	9 - 29
V203-002280	2 - 15
V225-000262	2 - 8
V252-000970	6 - 3

Index

Patrs Number	Key No.
V265-000140	3 - 8
V265-000550	9 - 24
V308-000030	1 - 18
V341-000200	2 - 7
V351-000030	4 - 4
V352-000300	3 - 11
V355-000840	9 - 21
V355-000860	9 - 14
V356-000780	9 - 28
V358-000220	4 - 3
V376-000450	9 - 12
V450-002050	2 - 10
V450-002060	2 - 11
V450-002070	2 - 12
V450-002080	9 - 13
V452-000030	3 - 6
V452-001650	8 - 9
V452-001660	9 - 27
V470-002170	1 - 17
V470-002180	2 - 23
V470-002190	2 - 30
V470-002200	1 - 20
V470-002210	2 - 27
V471-003660	2 - 26
V471-003820	2 - 28
V471-004870	2 - 24
V490-000500	2 - 33
V505-000070	1 - 10
V553-000020	1 - 4
V555-000190	9 - 2
V606-000020	1 - 6
V651-000011	9 - 18
V651-001060	9 - 17
V652-000230	1 - 19
V804-000000	2 - 13
V804-000000	6 - 8
V804-000000	9 - 23
V804-000010	2 - 40
V804-000010	8 - 3
V804-000040	4 - 2
V804-000050	1 - 22
V804-000060	2 - 4
V804-000060	3 - 12
V804-000060	7 - 12
V804-000100	1 - 12
V804-000100	1 - 15
V805-000000	8 - 5
V805-000070	4 - 8
V805-000150	6 - 6

Patrs Number	Key No.
V805-000240	13 - 6
X100-000060	12 - A1
X101-000011	10 - 1
X101-000011	12 - B1
X120-000020	12 - C1
X121-000002	12 - D1
X122-000072	12 - E1
X200-000000	12 - A2
X220-000020	12 - C2
X221-000100	12 - D2
X222-000140	12 - E2
X490-000840	10 - 3
X502-000340	9 - 30
X502-001030	7 - 13
X503-013600	4 - 15
X505-007710	6 - 9
X505-008600	2 - 39
X602-000160	10 - 4
X605-000170	10 - 5

Patrs Number	Key No.

YAMABIKO CORPORATION

7-2 SUEHIROCHO 1-CHOME, OHME, TOKYO 198-8760, JAPAN
PHONE: 81-428-32-6118. FAX: 81-428-32-6145.

-15I
No. 08-042

©2015 YAMABIKO CORPORATION