PARTS CATALOG

GRASS-TRIMMER / BRUSHCUTTER

SRM-222ES/U(37)

37017305 -

P014-002041-14G

1. CYLINDER, PISTON, CRANKSHAFT

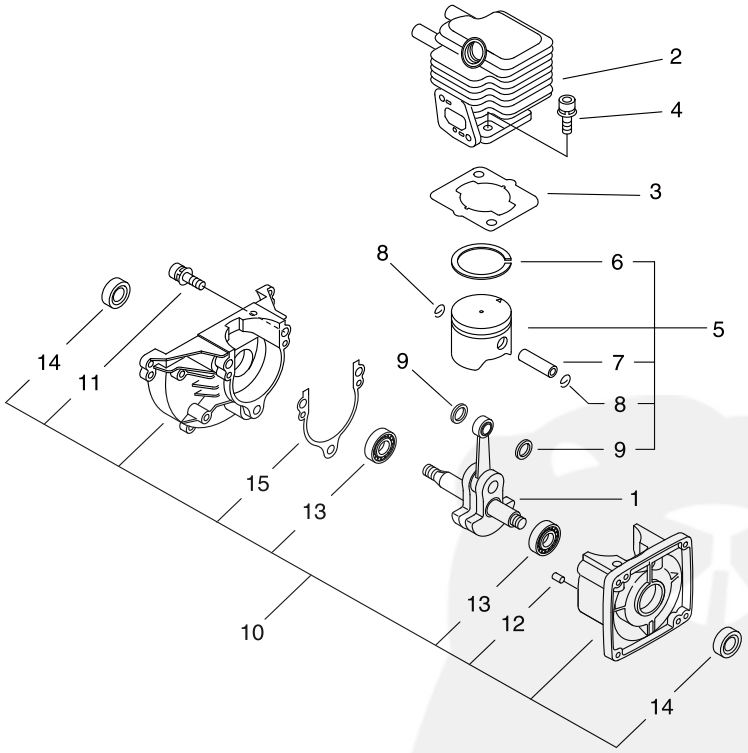

KEY	LV	PART NUMBER	Q'TY	DESCRIPTION	REMARKS	NOTE1	NOTE2
1		A011-001290	1	CRANKSHAFT,ASY			
2		A130-002100	1	CYLINDER			
3		101010-44332	1	GASKET, CYL. BASE			
4		900162-05022	2	BOLT, H.S. 5*22	5*22 W,SW		
5		P021-007712	1	PISTON KIT			
6	+	A101-000090	1	RING,PISTON			
7	+	100013-11520	1	PIN, PISTON			
8	+	100015-04630	2	CIRCLIP, PISTON PIN			
9	+	100014-11520	2	SPACER, PISTON PIN			
10		100204-52133	1	CRANKCASE KIT			
11	+	900162-05028	3	BOLT, H.S. 5*28	5*28 W,SW		
12	+	900330-40080	2	PIN F 4*8	4*8		
13	+	94095-36201	2	BEARING BALL			
14	+	100212-42031	2	OILSEAL	ISCD 12*22*4.5		
15	+	100242-42030	1	GASKET, CRANKCASE			

2. FANCOVER, CYLINDER COVER

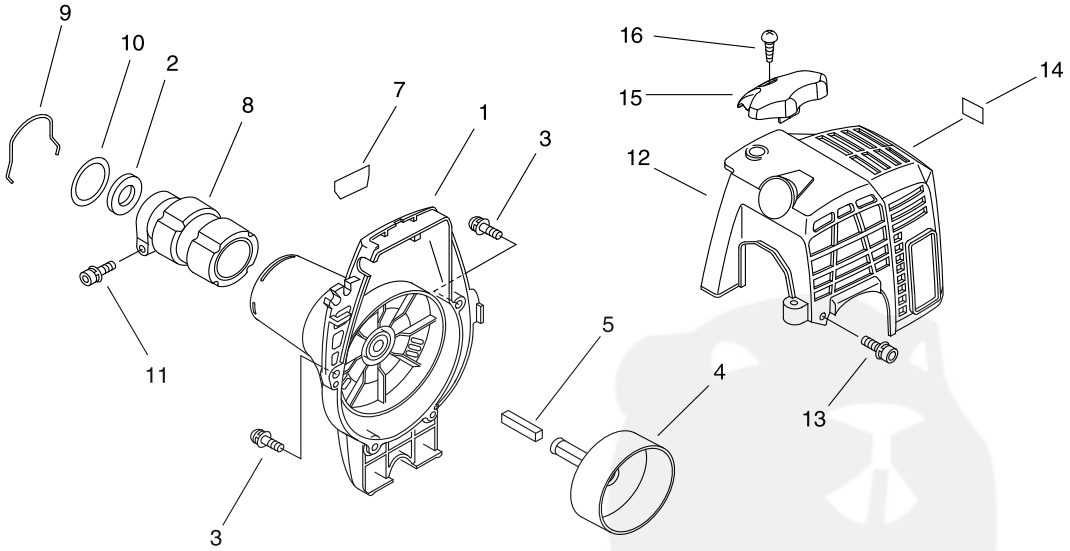

KEY	LV	PART NUMBER	Q'TY	DESCRIPTION	REMARKS	NOTE1	NOTE2
1		A172-000320	1	COVER,FAN			
2		175313-20430	1	RING, FELT			
3		91363-04016	3	SCREW	SMB-4*16/W,SW		
4		175005-44331	1	DRUM, CLUTCH			
5		V376-000990	1	SPACER			
7		X547-002310	1	LABEL,ECHO	ECHO+SRM-222ES		
8		A575-000110	1	FIXTURE,MAIN PIPE			
9		660316-55630	1	CLIP			
10		V315-000030	1	WASHER,CIRCULAR 30	33.5*41.0*T0.5		
11		91118-05028	1	BOLT	CM-5*28		
12		A160-000890	1	COVER,CYLINDER			
13		V202-000090	2	BOLT,4	4*16		
14		X505-002310	1	LABEL,CAUTION	HOT CAUTION		
15		A162-000130	1	GUARD,TOP			
16		900253-05020	1	SCREW 5*20	5*20		

3. MAGNETO

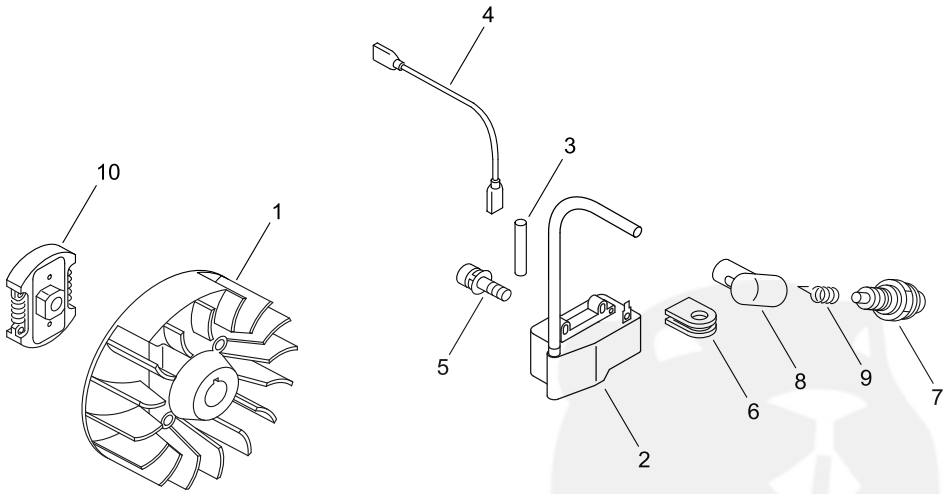

KEY	LV	PART NUMBER	Q'TY	DESCRIPTION	REMARKS	NOTE1	NOTE2
1		A409-000160	1	ROTOR,MAGNETO			
2		A411-000140	1	COIL,IGNITION			
3		V475-007300	1	TUBE			
4		162010-52830	1	LEAD, GROUND			
5		900162-04020	2	BOLT, H.S. 4*20	4*20 W,SW		
6		156112-40630	1	GROMMET			
7		A425-000000	1	SPARKPLUG	BPMR8Y		
8		159012-03433	1	CAP, SPARK PLUG			
9		159011-03432	1	COIL, SPARK PLUG			
10		175000-56831	1	CLUTCH ASSEMBLY			

4. AIR CLEANER, CARBURETOR

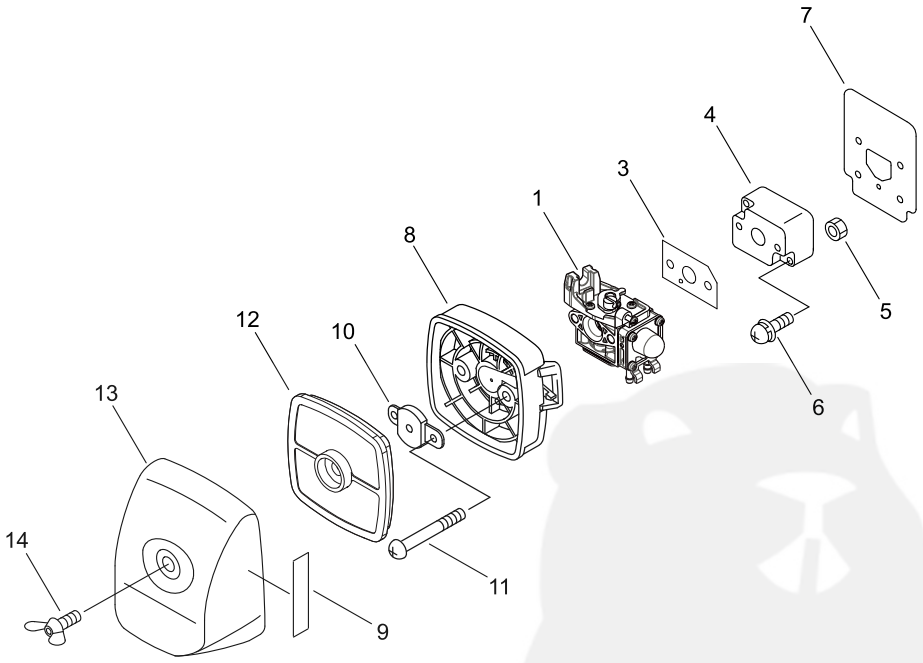

KEY	LV	PART NUMBER	Q'TY	DESCRIPTION	REMARKS	NOTE1	NOTE2
1		A021-003881	1	CARBURETOR,DIAPHRAGM	ZAMA RB-K113		
3		V103-001390	1	GASKET,INTAKE			
4		130017-44331	1	INSULATOR			
5		900500-00005	2	NUT 5	5		
6		900238-05022	2	SCREW 5*22	5*22		
7		V103-001640	1	GASKET,INTAKE			
8		P021-004480	1	CASE, AIR CLEANER			
9		890332-52730	1	LABEL, CHOKE			
10		129011-52730	1	PLATE, PREVENT			
11		900220-05065	2	SCREW 5*65	5*65		
12		A226-001410	1	ELEMENT,AIR FILTER			
13		130313-05863	1	LID, AIR CLEANER			
14		210417-52730	1	BOLT, WING	5*20		

5. FUEL TANK

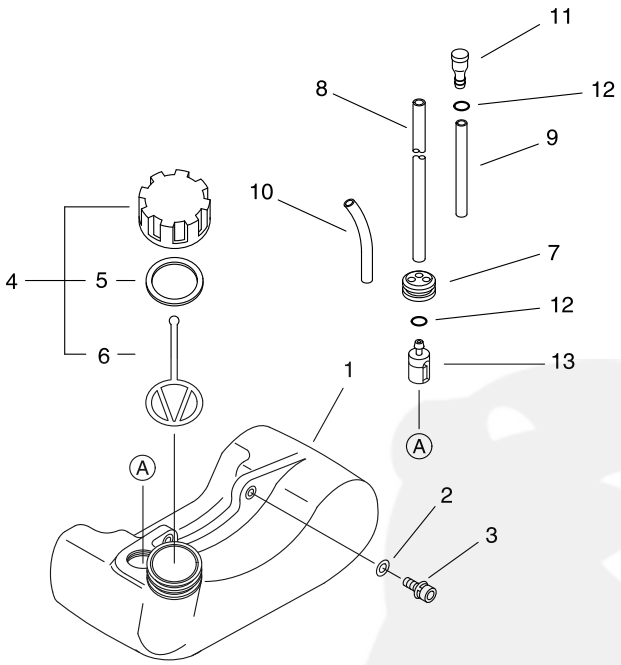

KEY	LV	PART NUMBER	Q'TY	DESCRIPTION	REMARKS	NOTE1	NOTE2
1		A350-000480	1	TANK, FUEL			
2		900603-00005	2	WASHER 5	5.5*12*0.8		
3		91118-05020	2	BOLT	CM-5*20		
4		P021-012210	1	CAP,FUEL ASY			
5	+	131016-55830	1	GASKET, FUEL CAP			
6	+	A365-000060	1	CONNECTOR,CAP	L=123		
7		132115-46730	1	GROMMET, FUEL			
8		V471-001190	1	PIPE	3*5*180 NBR		
9		V471-001200	1	PIPE	3*5*70 NBR		
10		132012-56030	1	PIPE	3*6*80 YL		
11		A356-000031	1	VALVE,CHECK			
12		V490-001240	2	CLIP			
13		131205-07321	1	STRAINER, FUEL			

6. MUFFLER

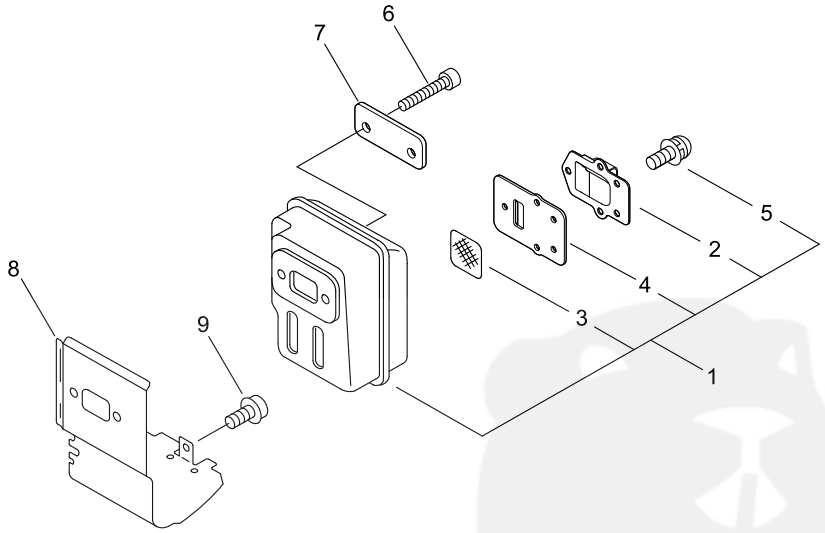

KEY	LV	PART NUMBER	Q'TY	DESCRIPTION	REMARKS	NOTE1	NOTE2
1		P021-037631	1	MUFFLER ASY			
2	+	A313-000600	1	GUIDE,EXH			
3	+	145862-40630	1	SCREEN, MUFFLER			
4	+	V104-001760	1	GASKET,EXHAUST			
5	+	91367-04010	5	SCREW	4*10/SW(SUS)		
6		900105-05055	2	BOLT, H.S. 5*55	5*55		
7		V150-000371	1	PLATE,EYE			
8		V104-000500	1	GASKET,EXHAUST			
9		91121-04008	1	BOLT, FLANGE	M4*8 10.9		

7. RECOIL STARTER

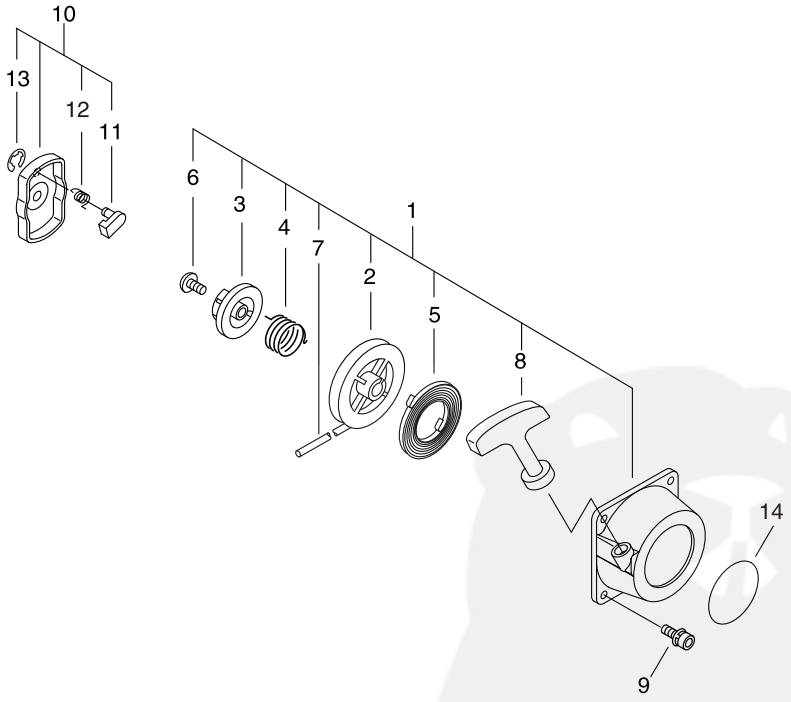

KEY	LV	PART NUMBER	Q'TY	DESCRIPTION	REMARKS	NOTE1	NOTE2
1		A051-001411	1	STARTER,RECOIL ASY			
2	+	A506-000500	1	REEL, ROPE	A541 081 A12 00		
3	+	A525-000020	1	CAM PLATE	A543 081 A12 00		
4	+	P022-008270	1	SPRING,DAMPER			
5	+	P022-019680	1	SPRING, SPIRAL			
6	+	177236-61830	1	SCREW			
7	+	P022-025730	1	ROPE, STARTER			
8	+	P022-036700	1	GRIP, STARTER			
9		V202-000090	2	BOLT,4	4*16		
10		A052-000180	1	PULLEY,ASM STARTER			
11	+	P022-006850	2	PAWL, STARTER			
12	+	177234-12220	2	SPRING, PAWL			
13	+	P022-002100	2	E-RING	4		
14		X502-000890	1	LABEL,ECHO			

8. GEAR CASE

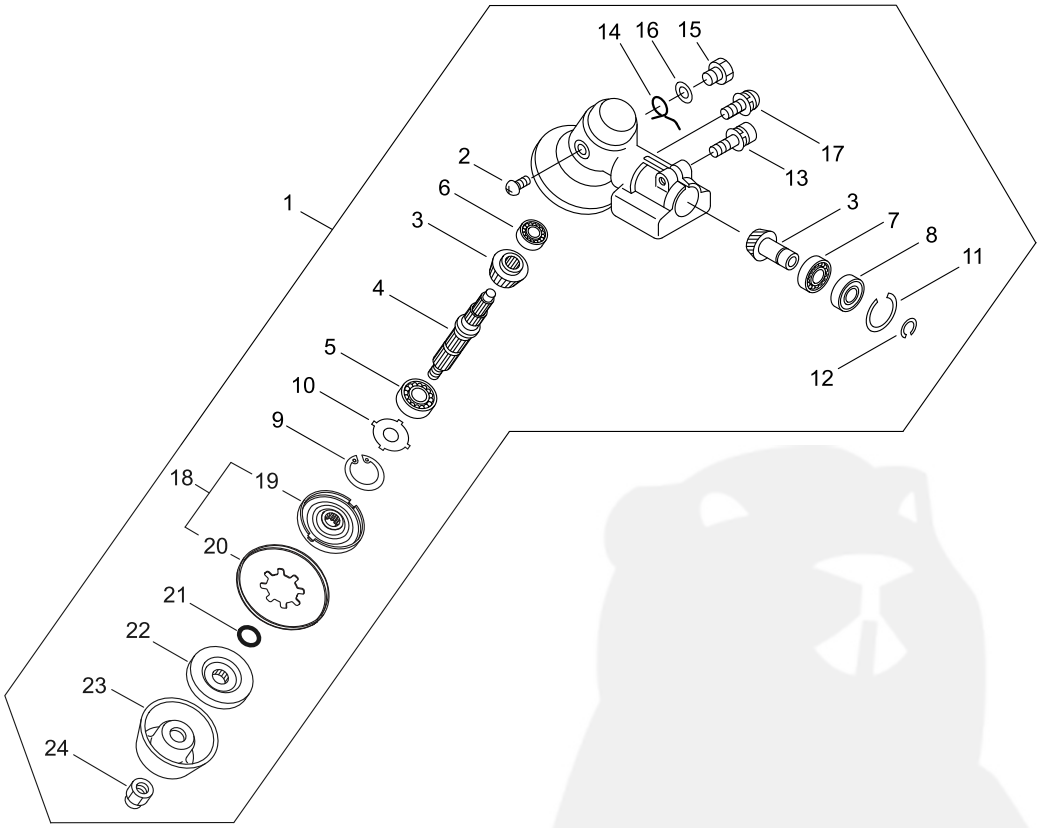

KEY	LV	PART NUMBER	Q'TY	DESCRIPTION	REMARKS	NOTE1	NOTE2
1		P021-012606	1	CASE,GEAR			
2	+	900220-04006	1	SCREW 4*6	4*6		
3	+	610300-42330	1	GEAR SET			
4	+	610310-56832	1	SHAFT, P.T.O.	12*10*1		
5	+	900812-06201	1	BEARING, BALL 6201			
6	+	94060-00626	1	BEARING, BALL			
7	+	94060-06900	1	BEARING BALL	WEPON BB6900		
8	+	94063-06900	1	BEARING BALL	WEPON BB6900Z		
9	+	900702-00032	1	CIRCLIP 32	CR-32		
10	+	610444-56830	1	WASHER			
11	+	900702-00022	1	CIRCLIP 22	CR-22		
12	+	900706-00010	1	CIRCLIP 10	WR-10		
13	+	91118-06025	1	BOLT			
14	+	V452-001310	1	SPRING,TORSION			
15	+	610434-50031	1	BOLT 8* 8	M8*8		
16	+	900603-50008	1	WASHER	8.5*18*0.8T		
17	+	900242-05010	1	SCREW 5*10			
18	+	610313-52932	1	FIXTURE,BLADE			
19	++	610313-52132	1	FIXTURE,BLADE			
20	++	610352-56830	1	PLATE, CUP			
21	+	900720-00012	1	O-RING 12	P-12		
22	+	610314-52130	1	PLATE, ADAPTER (L)			
23	+	699229-56830	1	PLATE, COVER			
24	+	610320-52130	1	NUT 10			

9. MAIN PIPE

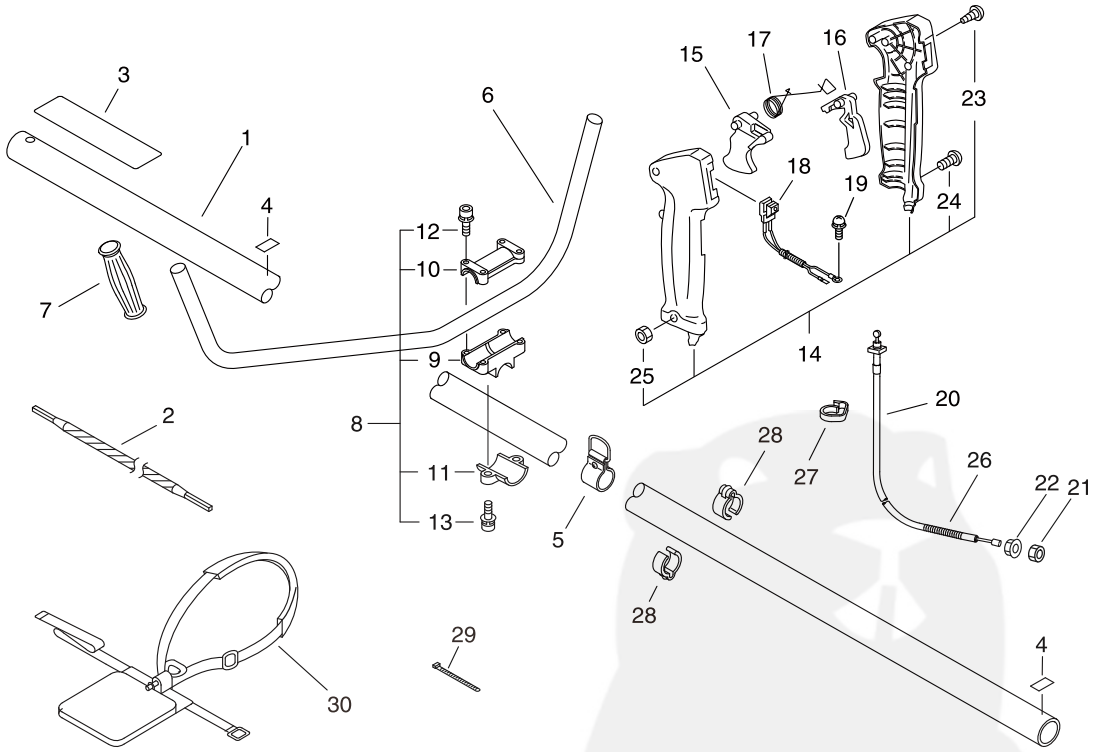

KEY	LV	PART NUMBER	Q'TY	DESCRIPTION	REMARKS	NOTE1	NOTE2
1		610206-44730	1	HOUSING ASSY, D.SHFT			
2		610013-44730	1	SHAFT, FLEXIBLE			
3		890617-43130	1	LABEL,CAUTION			
4		890152-04930	2	LABEL, CAUTION			
5		C063-000040	1	HOOK,LIFTING			
6		C400-000211	1	HANDLE,FRONT			
7		351311-02330	1	GRIP, HANDLE			
8		351301-22333	1	BRACKET ASY, HANDLE			
9	+	351312-22331	1	BRACKET, HANDLE (C)			
10	+	351313-22332	1	BRACKET, HANDLE (U)			
11	+	351314-22332	1	BRACKET, HANDLE (L)			
12	+	91118-05025	4	BOLT			
13	+	91118-05025	2	BOLT			
14		351102-47530	1	GRIP ASSY, F-HANDLE			
23	+	900246-03025	4	SCREW 3*25	3*25		
24	+	900220-05030	1	SCREW 5*30	5*30		
25	+	900500-00005	1	NUT 5	5		
15		178010-05960	1	CONTROL, THROTTLE			
16		178012-05960	1	LOCKOUT, THROTTLE			
17		178013-35631	1	SPRING, THR. LOCK			
18		A440-000881	1	SWITCH, ON OFF			
19		91363-04016	1	SCREW	SMB-4*16/W,SW		
20		V430-002300	1	CABLE,BOWDEN	770+140		
21		900502-00006	1	NUT 6 (3N)	3N6		

9. MAIN PIPE

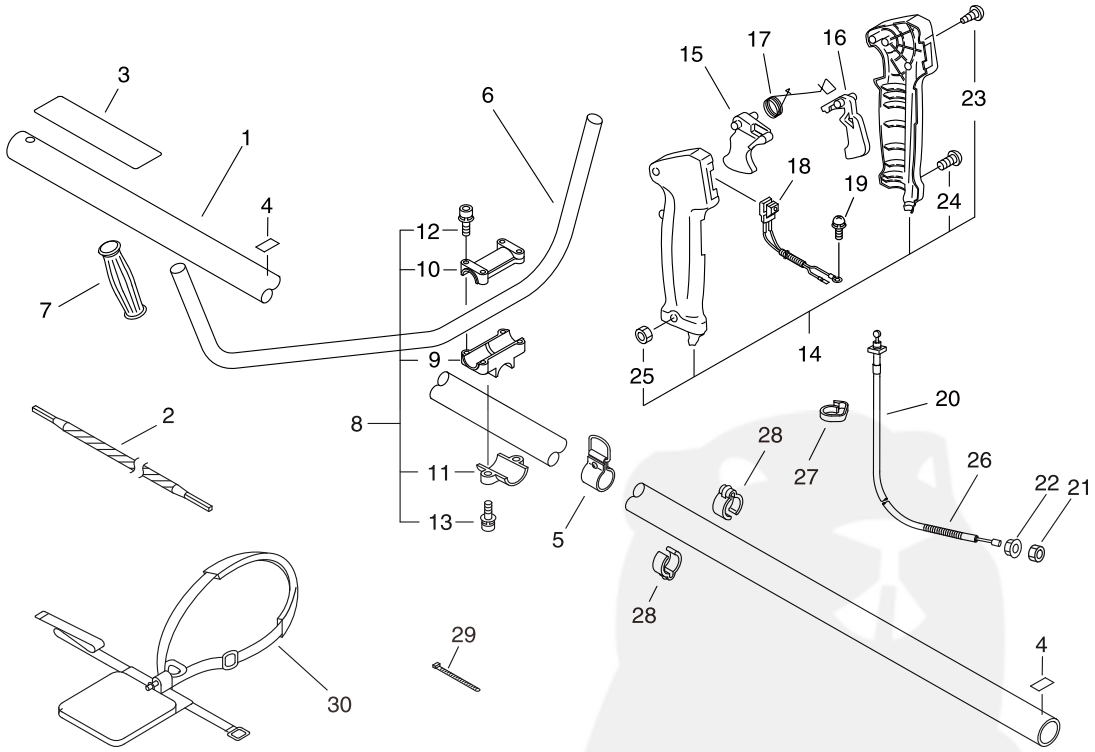

KEY	LV	PART NUMBER	Q'TY	DESCRIPTION	REMARKS	NOTE1	NOTE2
22		900518-00006	1	NUT, FLANGE	6		
26		V475-001500	1	TUBE	7*740		
27		159112-09961	1	CLIP			
28		224924-52130	2	CLIP	25MM		
29		V495-002690	2	BAND			
30		301001-44731	1	HARNESS, SHOULDER			

10. SHIELD

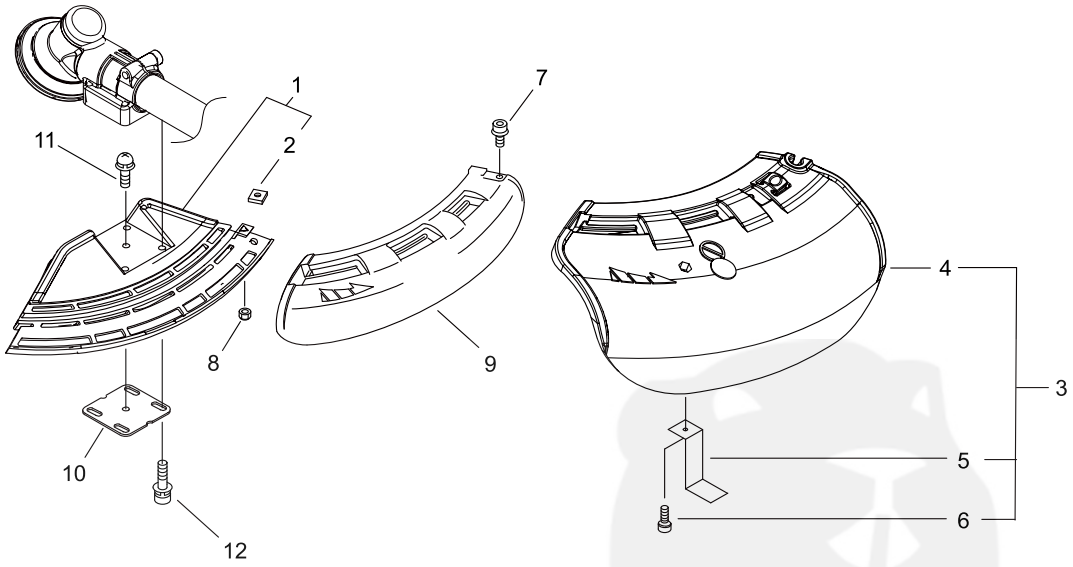

KEY	LV	PART NUMBER	Q'TY	DESCRIPTION	REMARKS	NOTE1	NOTE2
1		C550-000511	1	SHIELD,BLADE			
2	+	900565-00005	1	NUT	5		
3		P021-002625	1	SHIELD,BLADE(W/KNIFE			
4	+	C550-000570	1	SHIELD,BLADE			
5	+	C554-000001	1	KNIFE,CORD			
6	+	91118-05018	1	BOLT			
7		91121-05025	1	BOLT, FLANGE	10.9 SILVER		
8		900562-00005	1	NUT, LOCK	5		
9		C550-000551	1	SHIELD,BLADE			
10		C552-000200	1	PLATE, SHIELD			
11		91316-04010	1	SCREW	M4*10		
12		V203-001980	4	BOLT,5			

11. ACCESSORIES

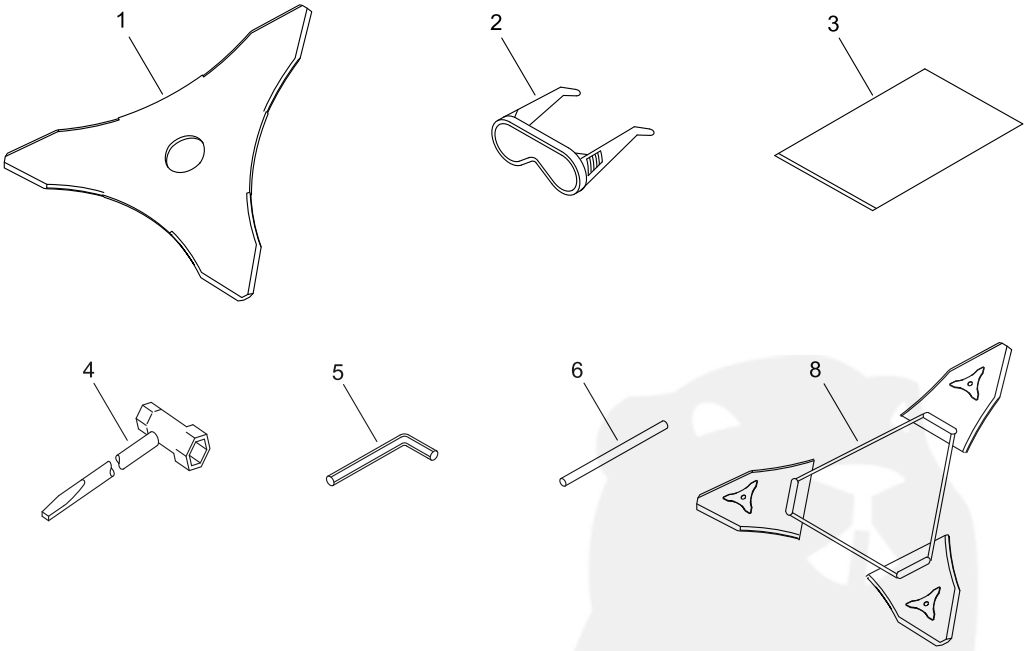

KEY	LV	PART NUMBER	Q'TY	DESCRIPTION	REMARKS	NOTE1	NOTE2
1		P021-014310	1	SAW,BUSH CUTTER	230*T3.0		
2		X690-000080	1	GOGGLE	SI CHINA, Z87.1		
3		X698-000040	1	TOOL,CASE	400*500		
4		X602-000080	1	TOOL,WRENCH	13*19 L180		
5		X605-000200	1	TOOL,L WRENCH	4MM M5		
6		X606-000080	1	TOOL,BAR	5*120		
8		X495-000270	1	SCABBARD,BLADE			

12. CARBURETOR

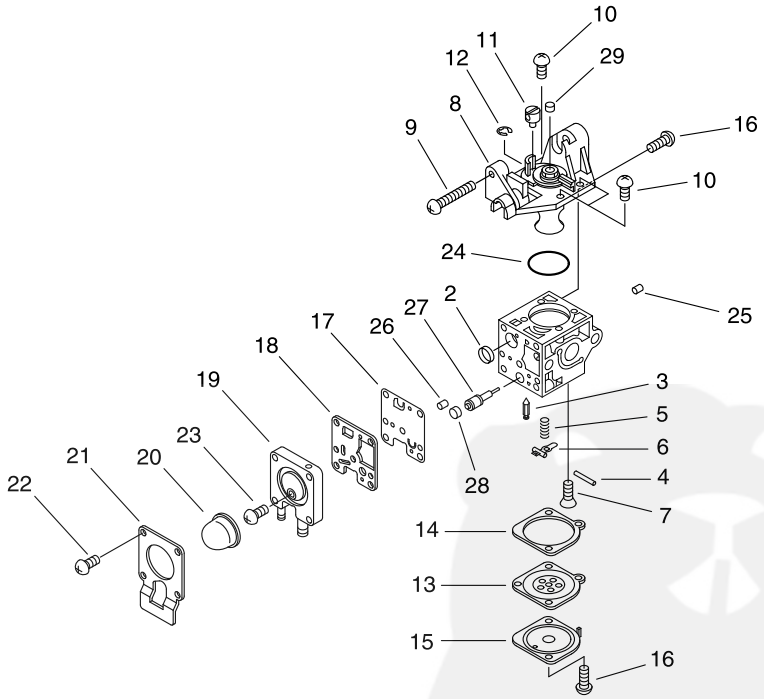

KEY	LV	PART NUMBER	Q'TY	DESCRIPTION	REMARKS	NOTE1	NOTE2
		A021-003881	1	CARBURETOR,DIAPHRAGM	ZAMA RB-K113		
2	+	P005-000010	1	STRAINER			
3	+	125337-08260	1	VALVE, INLET NEEDLE			
4	+	125338-13930	1	PIN, METERING ARM			
5	+	P005-002430	1	SPRING, MET. LEVER			
6	+	125323-08260	1	ARM, VALVE			
7	+	125339-42030	1	SCREW			
9	+	P005-000100	1	SCREW,THROTTLEADJUST			
10	+	125344-13931	3	SCREW			
11	+	P005-001240	1	POST			
12	+	P005-000190	1	E-RING			
13	+	P005-002230	1	DIAPHRAGM ,METERING			
14	+	P005-000200	1	GASKET, METERING			
15	+	125342-52130	1	COVER, DIAPHRAGM			
16	+	125344-52130	3	SCREW			
17	+	P005-000510	1	DIAPHRAGM, PUMP			
18	+	P005-000520	1	GASKET, PUMP			
19	+	P005-001890	1	BASE, ASY PRIMER			
20	+	P005-003110	1	PUMP, PRIMER			
21	+	P005-000250	1	RETAINER			
22	+	P005-001900	4	SCREW			
23	+	P005-000270	1	SCREW			
24	+	P005-000280	1	O-RING			
25	+	P005-001000	1	ROLLER, GUIDE			
26	+	P005-001250	1	RETAINER,PLUG BALL			

12. CARBURETOR

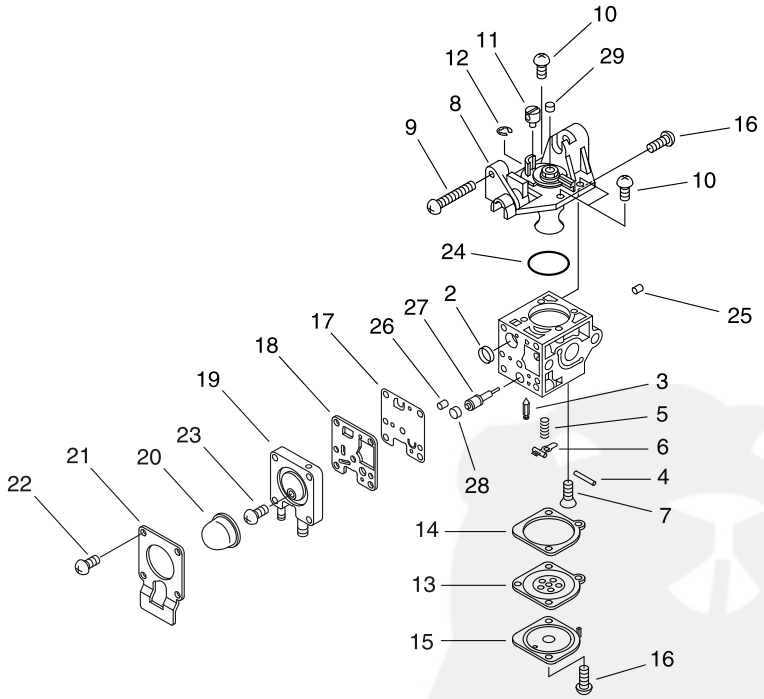

KEY	LV	PART NUMBER	Q'TY	DESCRIPTION	REMARKS	NOTE1	NOTE2
27	+	P005-001260	1	SCREW,MAINN MIXTURE			
28	+	P005-001270	1	PLUG, H AJUST SCREW			
29	+	A259-000010	1	CAP,LIMITER			

Index

Patrs Number	Key No.
100013-11520	1 - 7
100014-11520	1 - 9
100015-04630	1 - 8
100204-52133	1 - 10
100212-42031	1 - 14
100242-42030	1 - 15
101010-44332	1 - 3
125323-08260	12 - 6
125337-08260	12 - 3
125338-13930	12 - 4
125339-42030	12 - 7
125342-52130	12 - 15
125344-13931	12 - 10
125344-52130	12 - 16
129011-52730	4 - 10
130017-44331	4 - 4
130313-05863	4 - 13
131016-55830	5 - 5
131205-07321	5 - 13
132012-56030	5 - 10
132115-46730	5 - 7
145862-40630	6 - 3
156112-40630	3 - 6
159011-03432	3 - 9
159012-03433	3 - 8
159112-09961	9 - 27
162010-52830	3 - 4
175000-56831	3 - 10
175005-44331	2 - 4
175313-20430	2 - 2
177234-12220	7 - 12
177236-61830	7 - 6
178010-05960	9 - 15
178012-05960	9 - 16
178013-35631	9 - 17
210417-52730	4 - 14
224924-52130	9 - 28
301001-44731	9 - 30
351102-47530	9 - 14
351301-22333	9 - 8
351311-02330	9 - 7
351312-22331	9 - 9
351313-22332	9 - 10
351314-22332	9 - 11
610013-44730	9 - 2
610206-44730	9 - 1
610300-42330	8 - 3
610310-56832	8 - 4
610313-52132	8 - 19
610313-52932	8 - 18
610314-52130	8 - 22
610320-52130	8 - 24
610352-56830	8 - 20
610434-50031	8 - 15
610444-56830	8 - 10
660316-55630	2 - 9
699229-56830	8 - 23
890152-04930	9 - 4
890332-52730	4 - 9
890617-43130	9 - 3
900105-05055	6 - 6
900162-04020	3 - 5
900162-05022	1 - 4
900162-05028	1 - 11
900220-04006	8 - 2
900220-05030	9 - 24
900220-05065	4 - 11
900238-05022	4 - 6
900242-05010	8 - 17
900246-03025	9 - 23
900253-05020	2 - 16
900330-40080	1 - 12
900500-00005	4 - 5
900500-00005	9 - 25
900502-00006	9 - 21
900518-00006	9 - 22
900562-00005	10 - 8
900565-00005	10 - 2
900603-00005	5 - 2
900603-50008	8 - 16
900702-00022	8 - 11
900702-00032	8 - 9
900706-00010	8 - 12
900720-00012	8 - 21
900812-06201	8 - 5
91118-05018	10 - 6
91118-05020	5 - 3
91118-05025	9 - 12
91118-05025	9 - 13
91118-05028	2 - 11
91118-06025	8 - 13
91121-04008	6 - 9
91121-05025	10 - 7
91316-04010	10 - 11
91363-04016	2 - 3
91363-04016	9 - 19
91367-04010	6 - 5
94060-00626	8 - 6
94060-06900	8 - 7
94063-06900	8 - 8
94095-36201	1 - 13
A011-001290	1 - 1
A021-003881	4 - 1
A021-003881	12 -
A051-001411	7 - 1
A052-000180	7 - 10
A101-000090	1 - 6
A130-002100	1 - 2
A160-000890	2 - 12
A162-000130	2 - 15
A172-000320	2 - 1
A226-001410	4 - 12
A259-000010	12 - 29
A313-000600	6 - 2
A350-000480	5 - 1
A356-000031	5 - 11
A365-000060	5 - 6
A409-000160	3 - 1
A411-000140	3 - 2
A425-000000	3 - 7
A440-000881	9 - 18
A506-000500	7 - 2
A525-000020	7 - 3
A575-000110	2 - 8
C063-000040	9 - 5
C400-000211	9 - 6
C550-000511	10 - 1
C550-000551	10 - 9
C550-000570	10 - 4
C552-000200	10 - 10
C554-000001	10 - 5
P005-000010	12 - 2
P005-000100	12 - 9
P005-000190	12 - 12
P005-000200	12 - 14
P005-000250	12 - 21
P005-000270	12 - 23
P005-000280	12 - 24
P005-000510	12 - 17
P005-000520	12 - 18
P005-001000	12 - 25
P005-001240	12 - 11
P005-001250	12 - 26
P005-001260	12 - 27
P005-001270	12 - 28
P005-001890	12 - 19
P005-001900	12 - 22

Index

Patrs Number	Key No.	Patrs Number	Key No.	Patrs Number	Key No.
P005-002230	12 - 13				
P005-002430	12 - 5				
P005-003110	12 - 20				
P021-002625	10 - 3				
P021-004480	4 - 8				
P021-007712	1 - 5				
P021-012210	5 - 4				
P021-012606	8 - 1				
P021-014310	11 - 1				
P021-037631	6 - 1				
P022-002100	7 - 13				
P022-006850	7 - 11				
P022-008270	7 - 4				
P022-019680	7 - 5				
P022-025730	7 - 7				
P022-036700	7 - 8				
V103-001390	4 - 3				
V103-001640	4 - 7				
V104-000500	6 - 8				
V104-001760	6 - 4				
V150-000371	6 - 7				
V202-000090	2 - 13				
V202-000090	7 - 9				
V203-001980	10 - 12				
V315-000030	2 - 10				
V376-000990	2 - 5				
V430-002300	9 - 20				
V452-001310	8 - 14				
V471-001190	5 - 8				
V471-001200	5 - 9				
V475-001500	9 - 26				
V475-007300	3 - 3				
V490-001240	5 - 12				
V495-002690	9 - 29				
X495-000270	11 - 8				
X502-000890	7 - 14				
X505-002310	2 - 14				
X547-002310	2 - 7				
X602-000080	11 - 4				
X605-000200	11 - 5				
X606-000080	11 - 6				
X690-000080	11 - 2				
X698-000040	11 - 3				

YAMABIKO CORPORATION

7-2 SUEHIROCHO 1-CHOME, OHME, TOKYO 198-8760, JAPAN
PHONE: 81-428-32-6118. FAX: 81-428-32-6145.

-14G
No. 04-400

©2014 YAMABIKO CORPORATION