Documentatie tehnica motopompa MP100

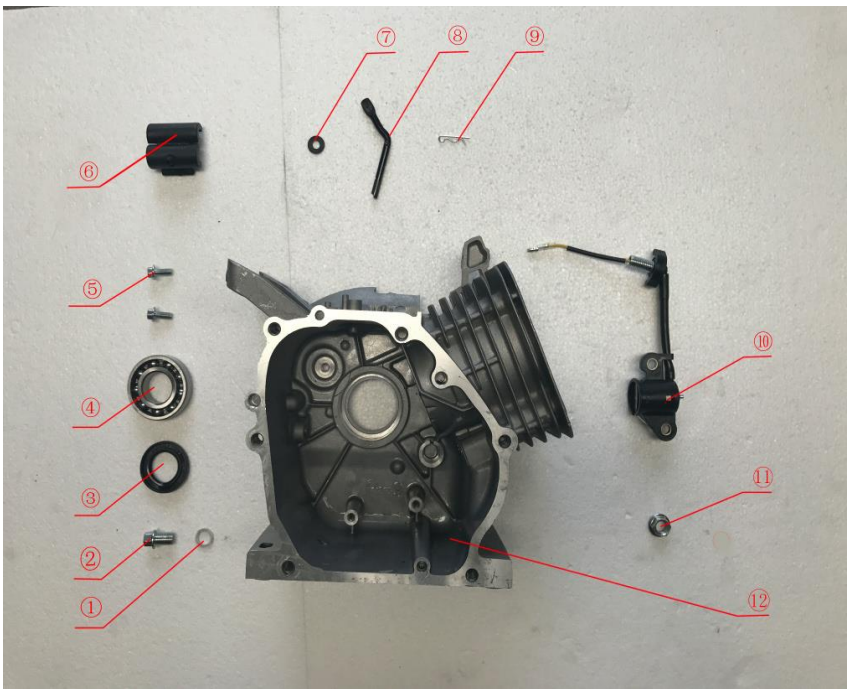

Nr. Crt	Denumire produs	Product name	Cod comanda
1	saiba	washer drain plug	psmp90-1
2	buson drenaj ulei	drain plug	psmp90-2
3	simering	oil seal （crankshaft）	psmp90-3
4	rulment	bearing	psmp90-4
5	surub	bolt	psmp90-5
6	clema	clip	psmp90-6
7	saiba	washer, shaft covernor arm	psmp90-7
8	brat regulator	shaft governor arm	psmp90-8
9	siguranta	pin for shaft governor arm	psmp90-9
10	senzor ulei	oil sensor	psmp90-10
11	piulita	nut for oil sensor	psmp90-11
12	carter	crank case	psmp90-12

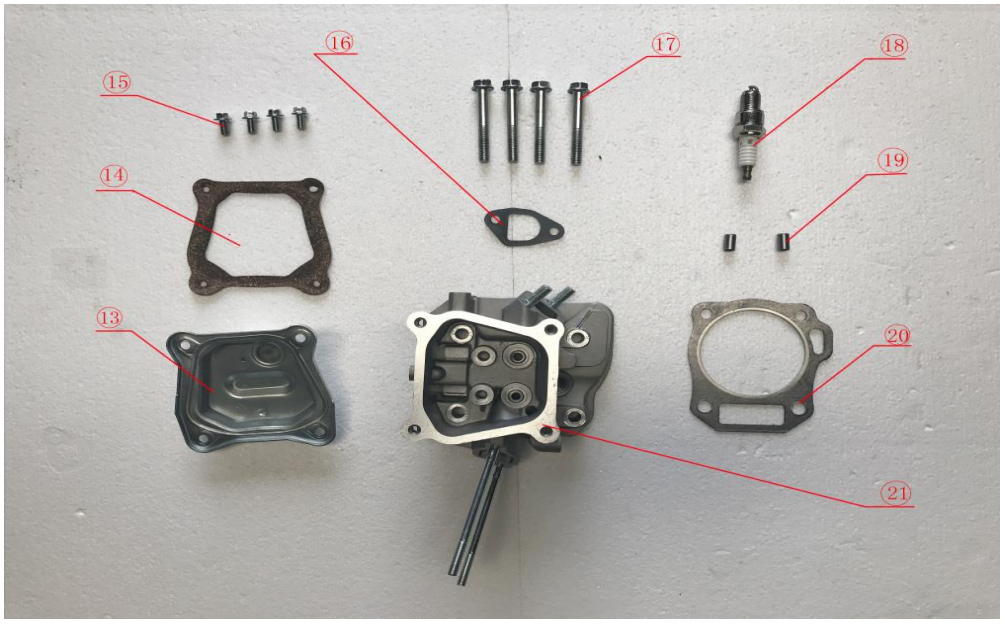

Nr.crt	Denumire produs	Product name	Cod comanda
13	capac culbutori	head comp cover,cylinder	psmp90-13
14	garnitura capac culbutori	gasket for head comp	psmp90-14
15	surub	bolt	psmp90-15
16	garnitura	gasket	psmp90-16
17	surub	bolt	psmp90-17
18	bujie	plug spark	br4t
19	pin de ghidare 10x14	pin dowerϕ10×14	psmp90-19
20	garnitura chiuloasa	gasket cylinder	psmp90-20
21	chiuloasa	head comp cylinder	psmp90-21

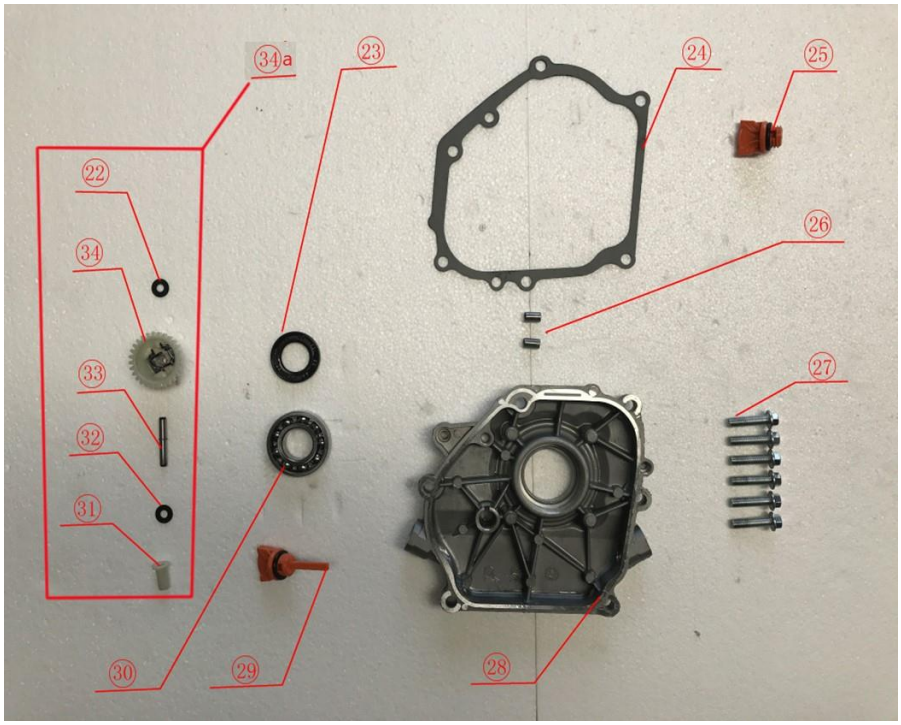

Nr. Crt	Denumire produs	Product name	Cod comanda
22	saiba	washer,gear governor	psmp90-22
23	simering	oil seal （crankshaft）	psmp90-23
24	garnitura carter	gasket for crankshaft case	psmp90-24
25	buson ulei	oil plug set	psmp90-25
26	pin de ghidare	pin	psmp90-26
27	surub	bolt	psmp90-27
28	capac carter	crank case cover	psmp90-28
29	joja	dip stick set	psmp90-29
30	rulment	bearing	psmp90-30
31	culisa	ratator valve	psmp90-31
32	saiba	gear governor gasket	psmp90-32
33	ax regulator	gear governor shaft	psmp90-33
34	pinion regulator	gear governor	psmp90-34
34a	ansamblu regulator	gear governor assy	psmp90-34a

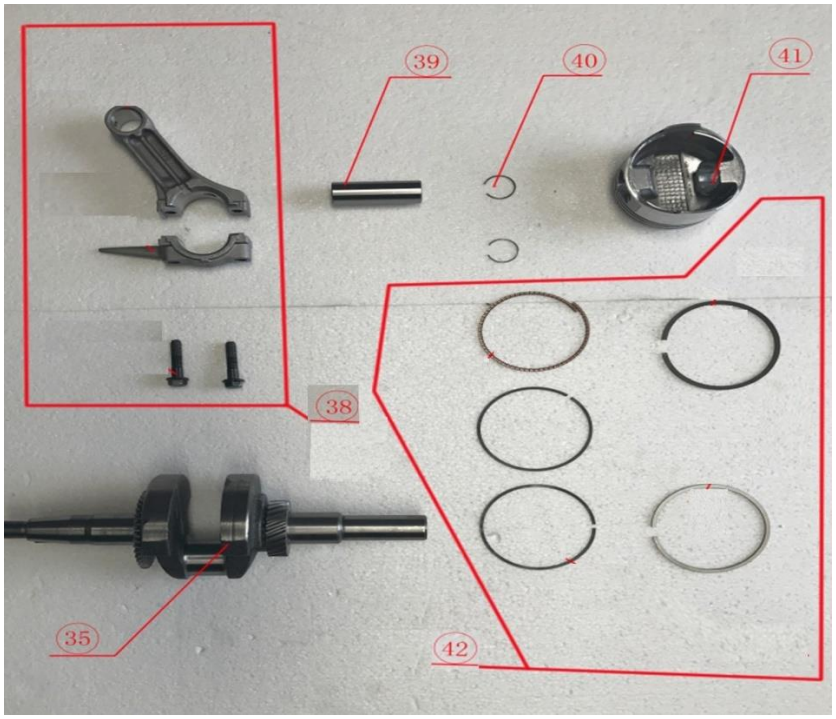

Nr. Crt	Denumire produs	Product name	Cod comanda
35	arbore motor	crankshaft	psmp90-35
38	ansamblu biela	connecting rod assy	psmp90-38
39	bolt piston	pin piston	psmp90-39
40	siguranta bolt piston	clip piston pin	psmp90-40
41	piston	piston	psmp90-41
42	set segmenti	piston ring set	psmp90-42

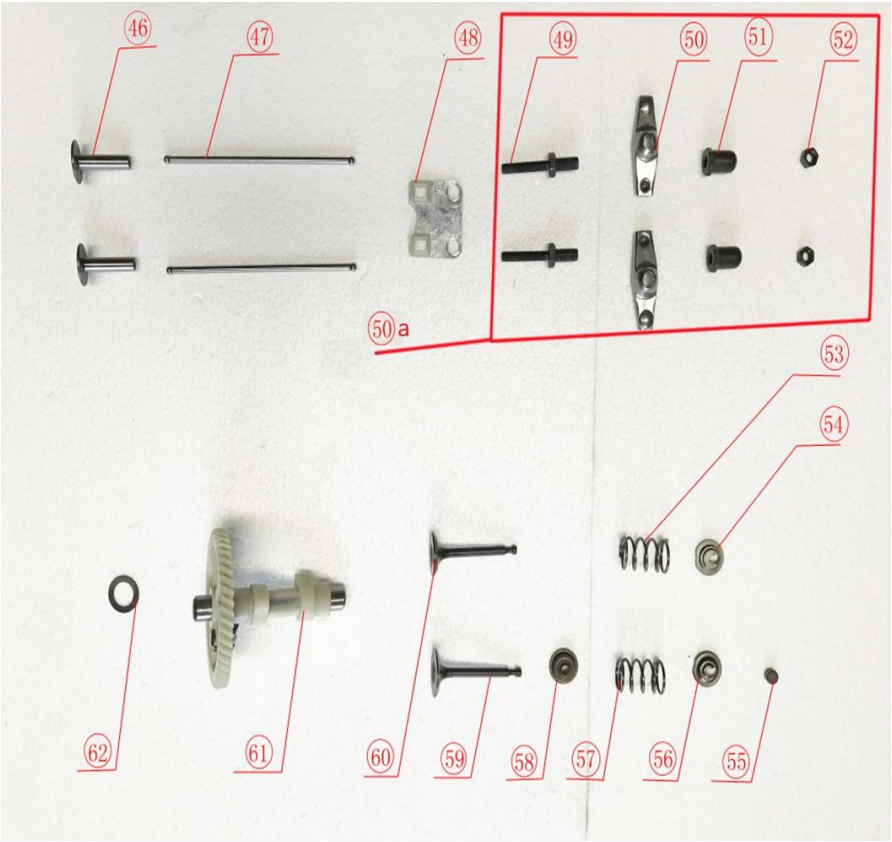

Nr. Crt	Denumire produs	Product name	Cod comanda
46	tachet	lefter valve	psmp90-46
47	tija	rod	psmp90-47
48	pacuta ghidaj	plate	psmp90-48
49	prezon culbutor	rocker stud	psmp90-49
50	culbutor	arm valve rocker	psmp90-50
50a	ansmblu culbutori	arm valve rocker assy	psmp90-50a
51	piulita speciala	special nut	psmp90-51
52	piulita	nut	psmp90-52
53	arc supapa admisie	spring valve in	psmp90-53
54	taler supapa admisie	spring seat for valve in	psmp90-54
55	pastila	pill	psmp90-55
56	taler supapa evacuare	spring seat for valve ex	psmp90-56
57	arc supapa evacuare	spring valve ex	psmp90-57
58	simering	oil seal	psmp90-58
59	supapa evacuare	valve ex	psmp90-59
60	supapa admisie	valve in	psmp90-60
61	ax came	camshaft assy	psmp90-61
62	saiba	washer	psmp90-62

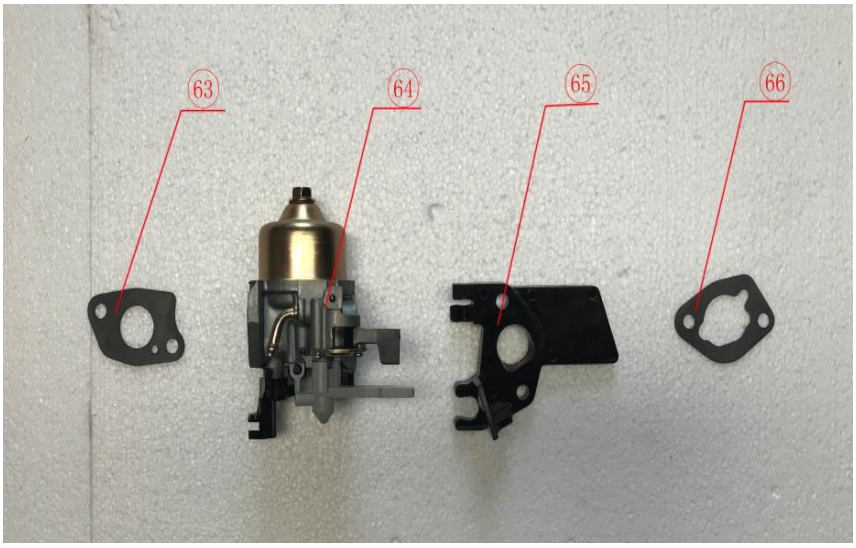

Nr. Crt	Denumire produs	Product name	Cod comanda
63	garnitura carburator	gasket carburetor	psmp90-63
64	carburator	carburetor	psmp90-64
65	izolator	insulator carburetor	psmp90-65
66	garnitura filtru aer	gasket for air cleaner	psmp90-66

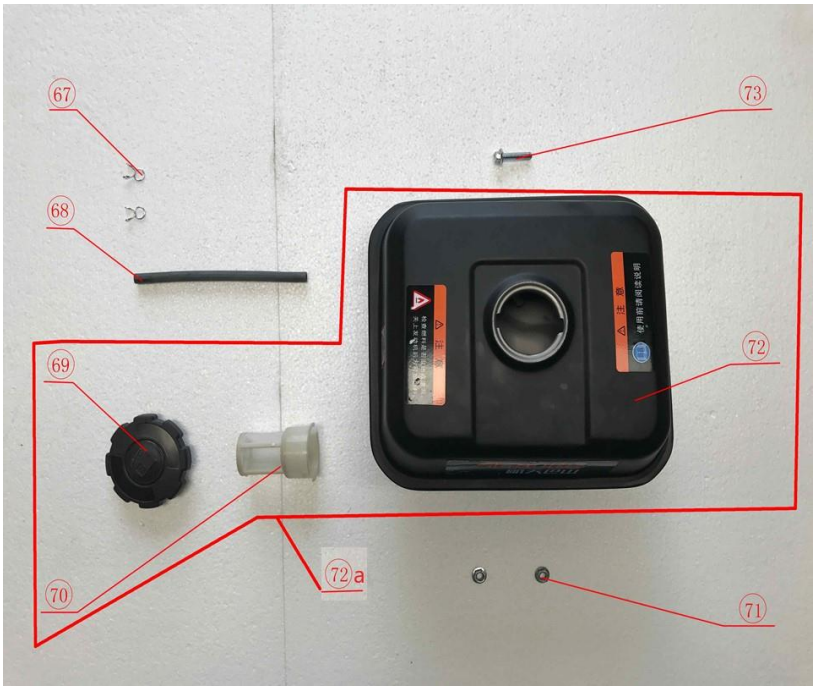

Nr. Crt	Denumire produs	Product name	Cod comanda
67	clema	clip	psmp90-67
68	furtun alimentare	tube	psmp90-68

69	buson rezervor	cap	psmp90-69
70	sita	filter screen	psmp90-70
71	piulita	nut	psmp90-71
72	rezervor combustibil	fuel tank	psmp90-72
72a	ansamblu rezervor combustibil	fuel tank assy	psmp90-72a
73	surub	bolt	psmp90-73

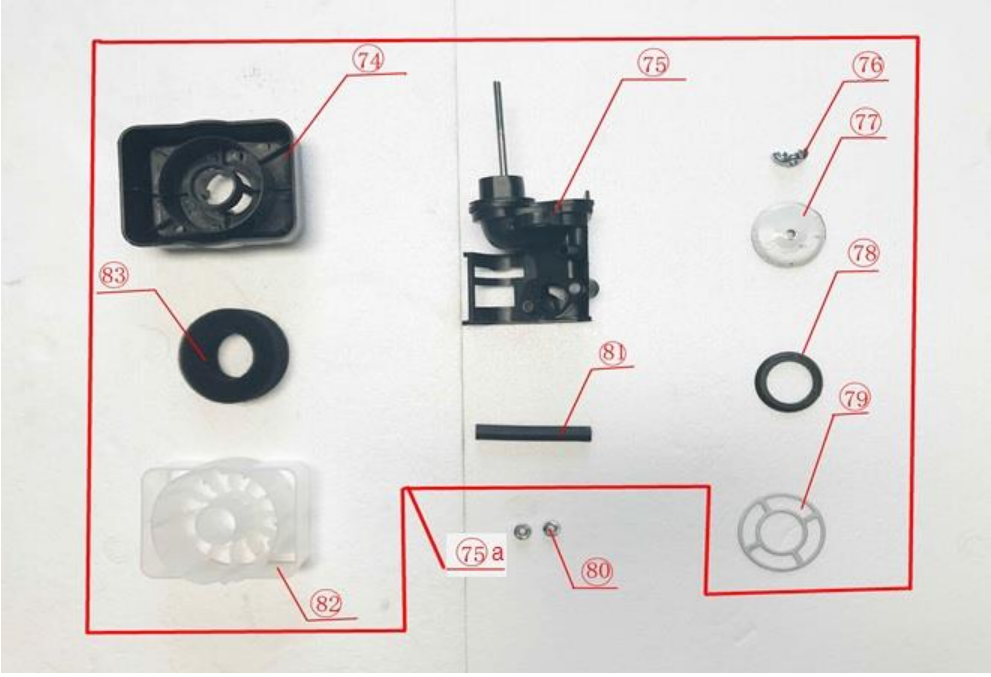

Nr. Crt	Denumire produs	Product name	Cod comanda
74	capac filtru aer	air filter cover	psmp90-74
75	suport filtru aer	air filter holder	psmp90-75
75a	ansamblu filtru aer	air filter assembly	psmp90-75a
76	piulita fluture	nut	psmp90-76
77	saiba	washer	psmp90-77
78	garnitura	gasket	psmp90-78
79	placa	plate	psmp90-79
80	piulita	nut	psmp90-80
81	furtun epurator	cleaning hose	psmp90-81
82	pahar decantor	decanter glass	psmp90-82
83	filtru aer	air filter	psmp90-83

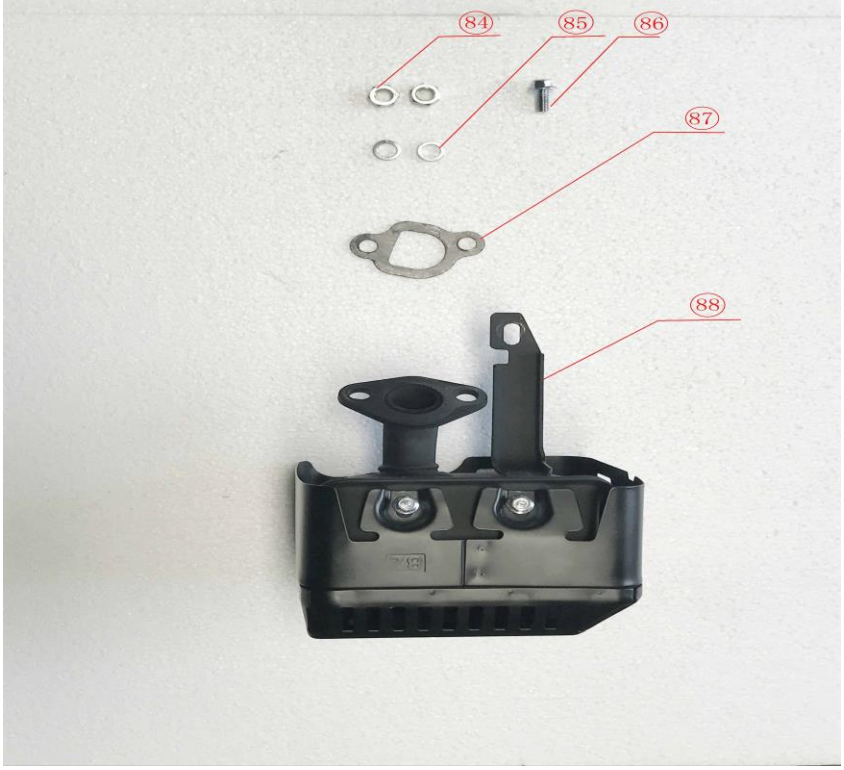

Nr. Crt	Denumire produs	Product name	Cod comanda
84	piulita	nut	psmp90-84
85	saiba grover	spring washer	psmp90-85
86	surub	screw	psmp90-86
87	garnitura esapament	gasket muffler	psmp90-87
88	toba esapament	muffler	psmp90-88

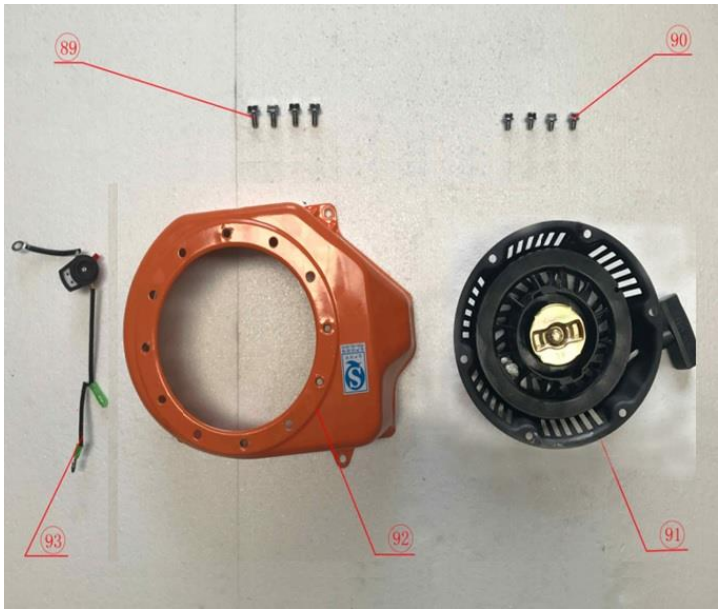

Nr. Crt	Denumire produs	Product name	Cod comanda
89	surub	screw	psmp90-89
90	surub	screw	psmp90-90
91	demaror	starter	psmp90-91
92	capac ventilator	wind scooper	psmp90-92
93	buton on/off	switch on/off	psmp90-93

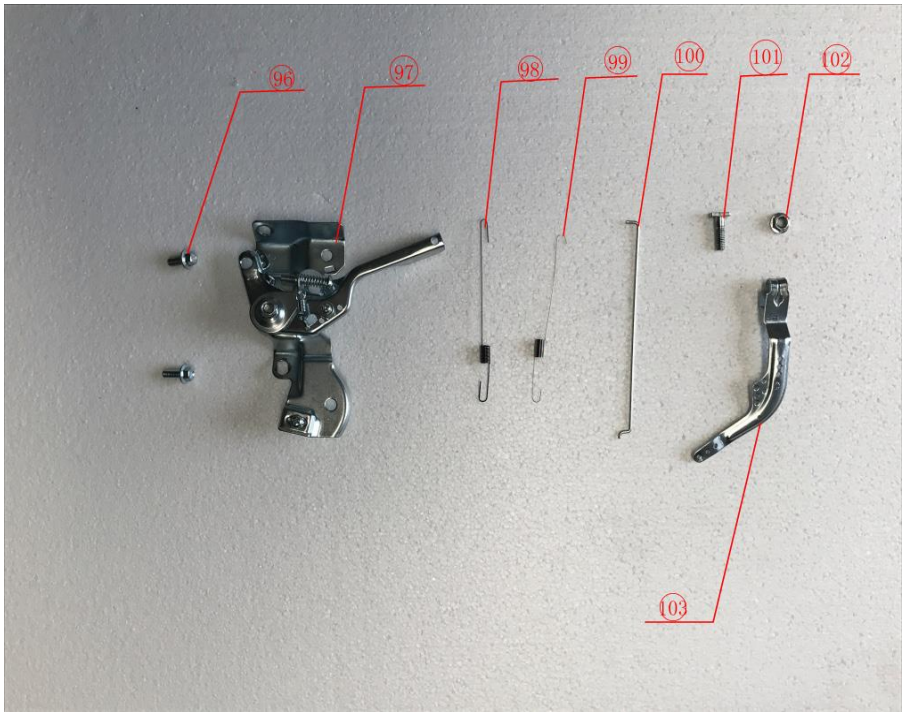

Nr. Crt	Denumire produs	Product name	Cod comanda
96	surub	screw	psmp90-96
97	ansamblu maneta acceleratie	throttle control assy	psmp90-97
98	arc acceleratie	spring throttle	psmp90-98
99	arc regulator	spring governor arm	psmp90-99
100	tija regulator	rod governor arm	psmp90-100
101	surub	screw	psmp90-101
102	piulita	nut	psmp90-102
103	brat regulator	arm governor	psmp90-103

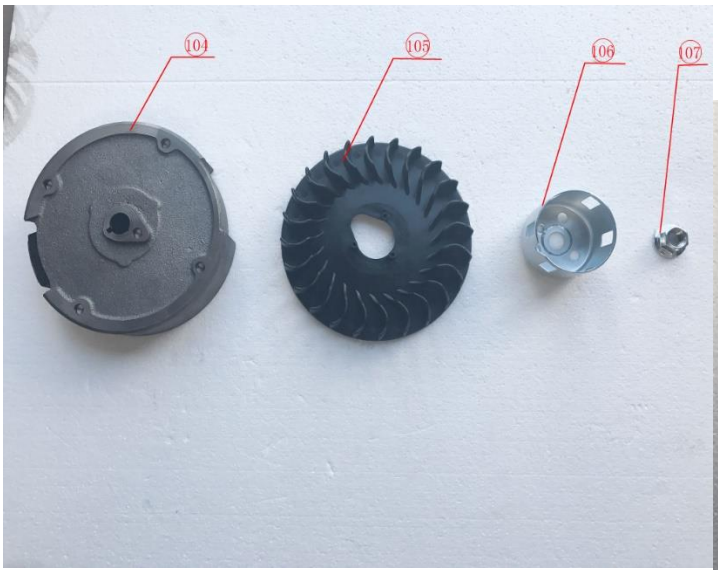

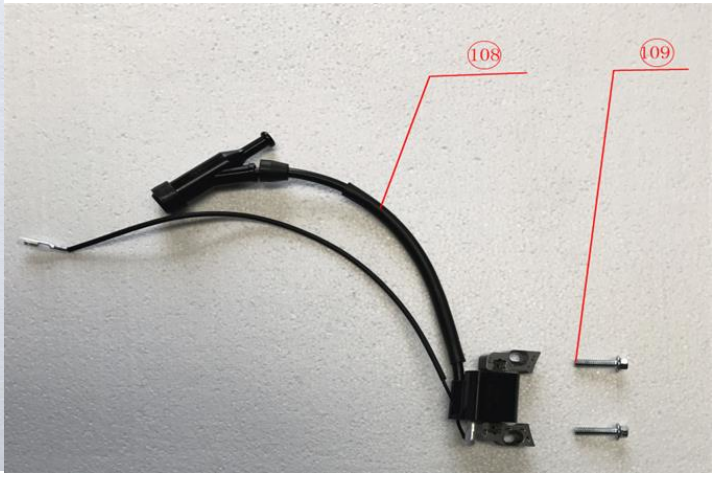

Nr. Crt	Denumire produs	Product name	Cod comanda
104	volanta	flywheel	psmp90-104
105	ventilator	fan cooling	psmp90-105
106	cuplaj	coupling	psmp90-106
107	piulita	nut	psmp90-107
108	modul aprindere	ignition coil	psmp90-108
109	surub	screw	psmp90-109

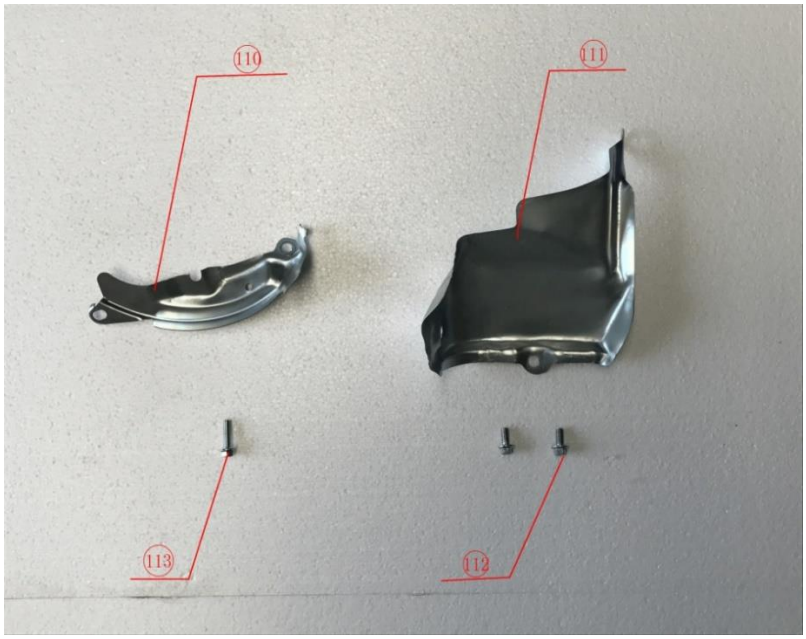

Nr. Crt	Denumire produs	Product name	Cod comanda
110	deflector	shroud	psmp90-110
111	deflector	shroud	psmp90-111
112	surub	screw	psmp90-112
113	surub	screw	psmp90-113

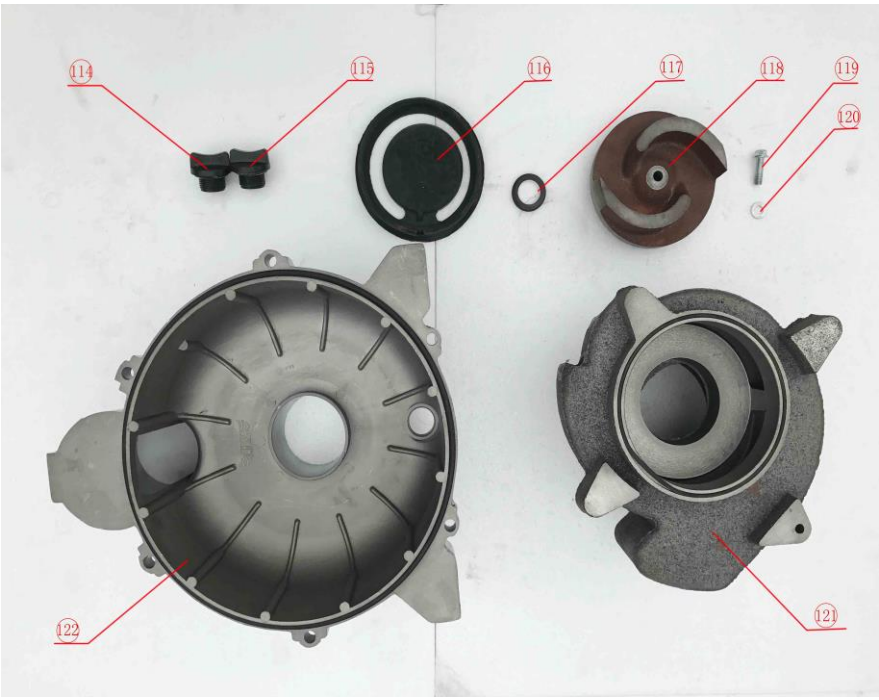

Nr. Crt	Denumire produs	Product name	Cod comanda
114	buson	plug screw	psmp100-114
115	buson	plug screw	psmp100-115
116	clapeta	flap	psmp100-116
117	etansare mecanica	water seal	psmp100-117
118	turbina	impeller	psmp100-118
119	surub	screw	psmp100-119
120	saiba	washer	psmp100-120
121	carcasa turbina	impeller case	psmp100-121
122	carcasa pompa	pump housing	psmp100-122

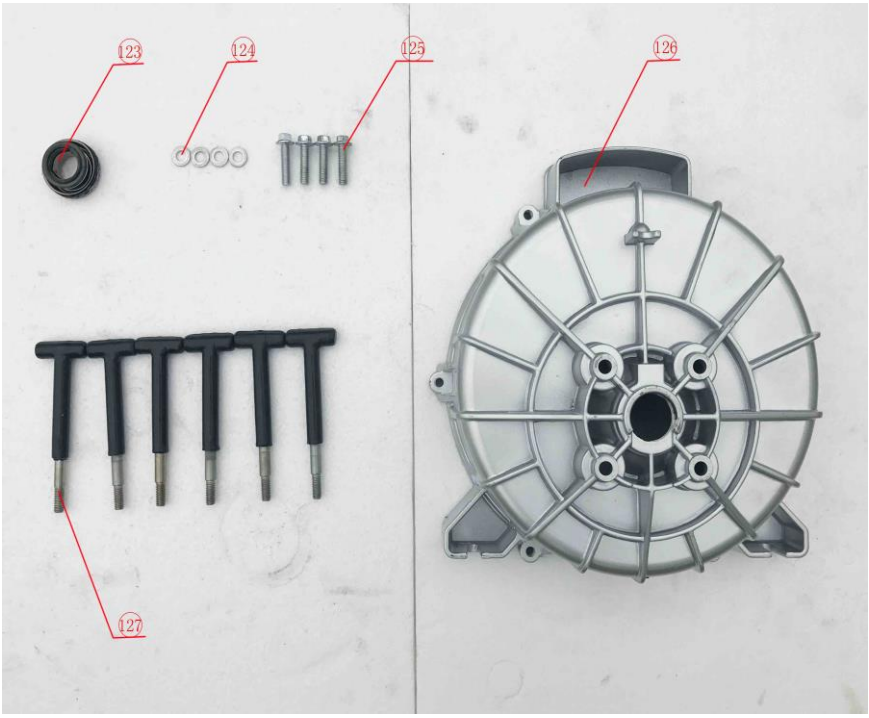

Nr. Crt	Denumire produs	Product name	Cod comanda
123	etansare mecanica	water seal	psmp100-123
124	saiba	washer	psmp100-124
125	surub	screw	psmp100-125
126	capac pompa	pump base	psmp100-126
127	surub	screw	psmp100-127

Nr. Crt	Denumire produs	Product name	Cod comanda
128	colier	necklace	psmp100-128
129	racord	connector	psmp100-129
130	racord	connector	psmp100-130
131	piulita racord	nut connection	psmp100-131
132	oring	oring	psmp100-132
133	sorb	filter bottom valve	psmp100-133

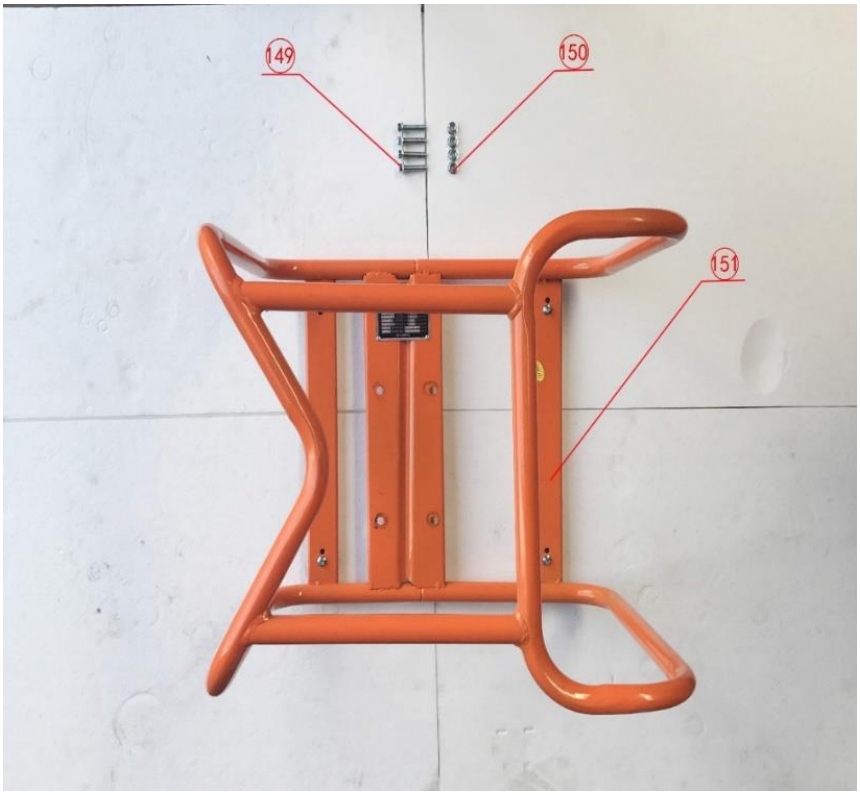

Nr. Crt	Denumire produs	Product name	Cod comanda
149	surub	screw	psmp90-149
150	piulita	nut	psmp90-150
151	cadru	frame	psmp90-151