EXPLODED PARTS LIST

Year: 2016

V 460 P

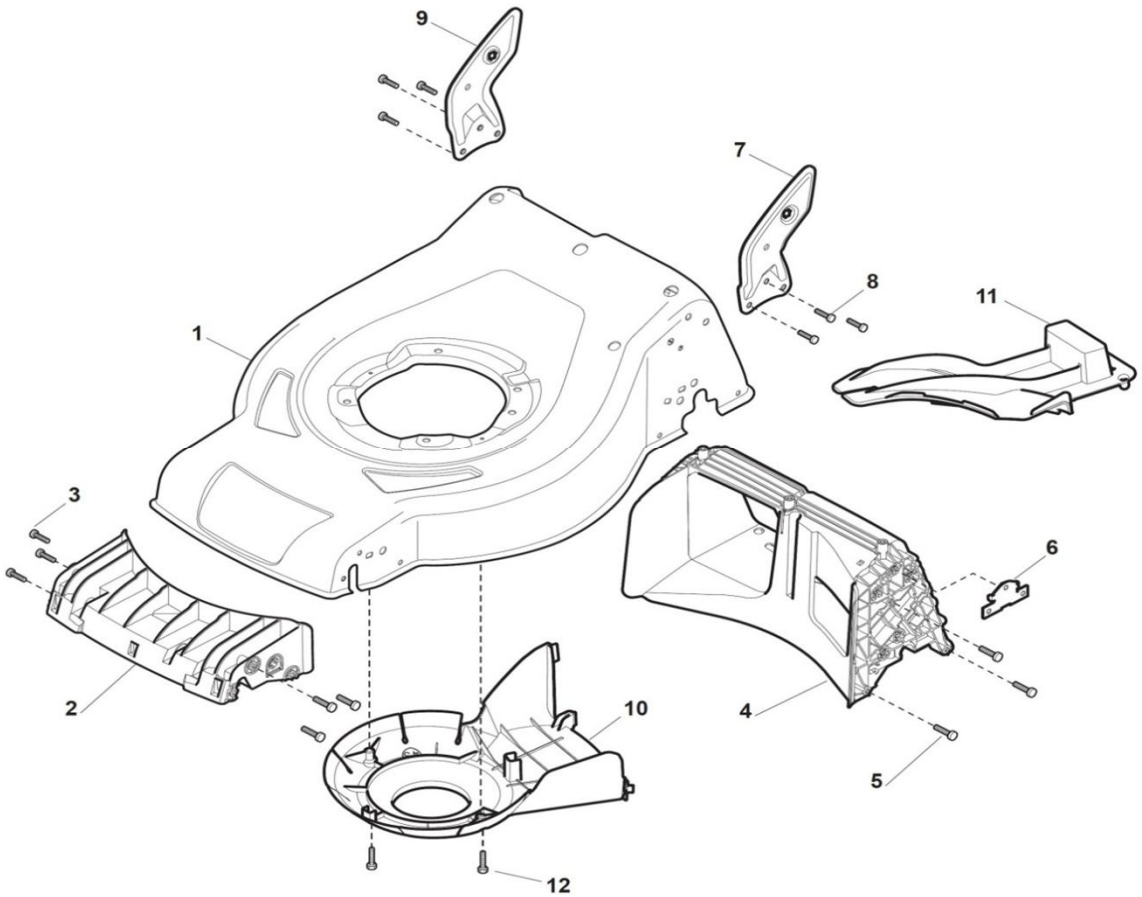

No	Code	Name	Qty	No	Code	Name	Qty
1		Black Deck	1				
2	042471	Front Conveyor Assy	1				
3		Screw	6				
4		Rear Conveyor Assy	1				
5		Screw	6				
6		Plate	2				
7		Left Bracket	1				
8		Screw	6				
9		Right Bracket	1				
10	042488	Belt Protection	1				
11		Mulching Deflector	1				
12		Screw	2				

EXPLODED PARTS LIST

Year: 2016

V 460 P

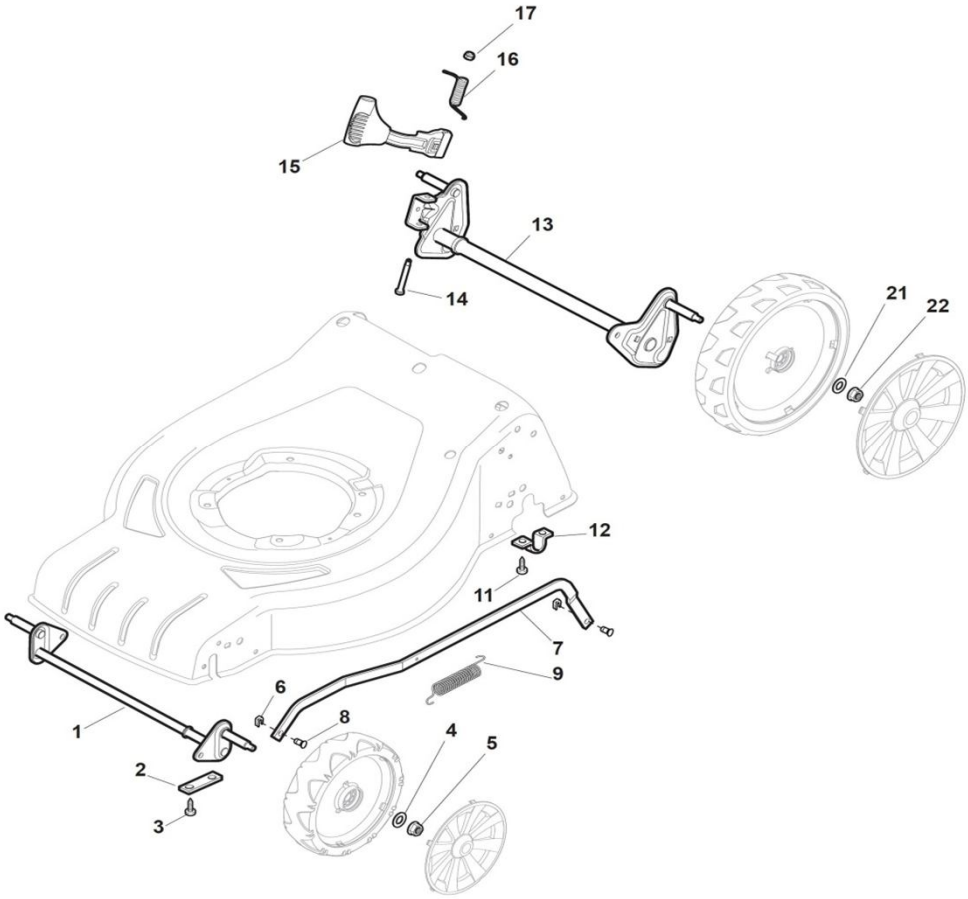

No	Code	Name	Qty	No	Code	Name	Qty
1		Front Wheel Axle	1				
2		Plate	2				
3		Screw	4				
4		Washer	2				
5	042472	Nut	2				
6		Plate	2				
7	042473	Rod, Height Adjustment	1				
8		Pin	2				
9	042469	Spring	1				
11		Screw	4				
12		Plate	2				
13		Rear Wheel Axle	1				
14		Pin	1				
15	042474	Wheels Rear Adj. Lever	1				
16	042475	Spring	1				
17		Nut	1				
21		Washer	2				
22	042472	Nut	2				

EXPLODED PARTS LIST

Year: 2016

V 460 P

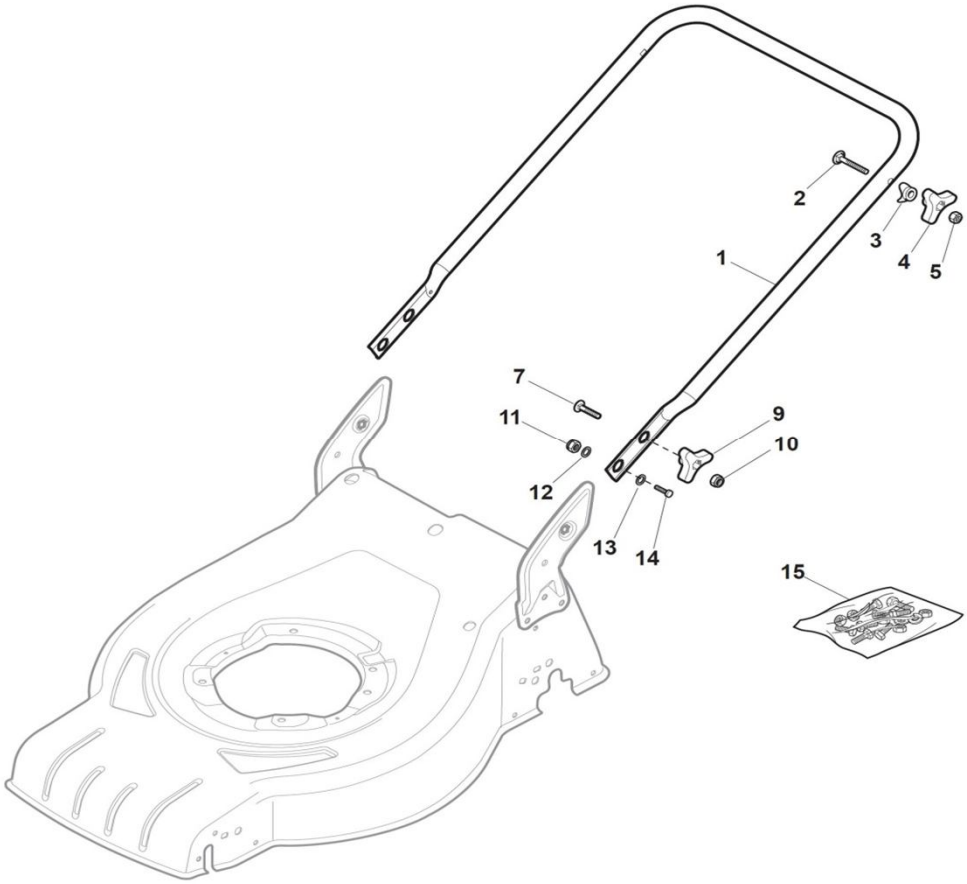

No	Code	Name	Qty	No	Code	Name	Qty
1		Handle Lower Part	1				
2		Screw	2				
3		Washer	2				
4		Knob	2				
5		Nut	2				
7	046684	Screw	2				
9		Knob	2				
10		Nut	2				
11	042472	Nut	2				
12		Washer	2				
13		Elastic Washer	2				
14		Screw	2				
15		Outfit, Screws	1				

EXPLODED PARTS LIST

Year: 2016

V 460 P

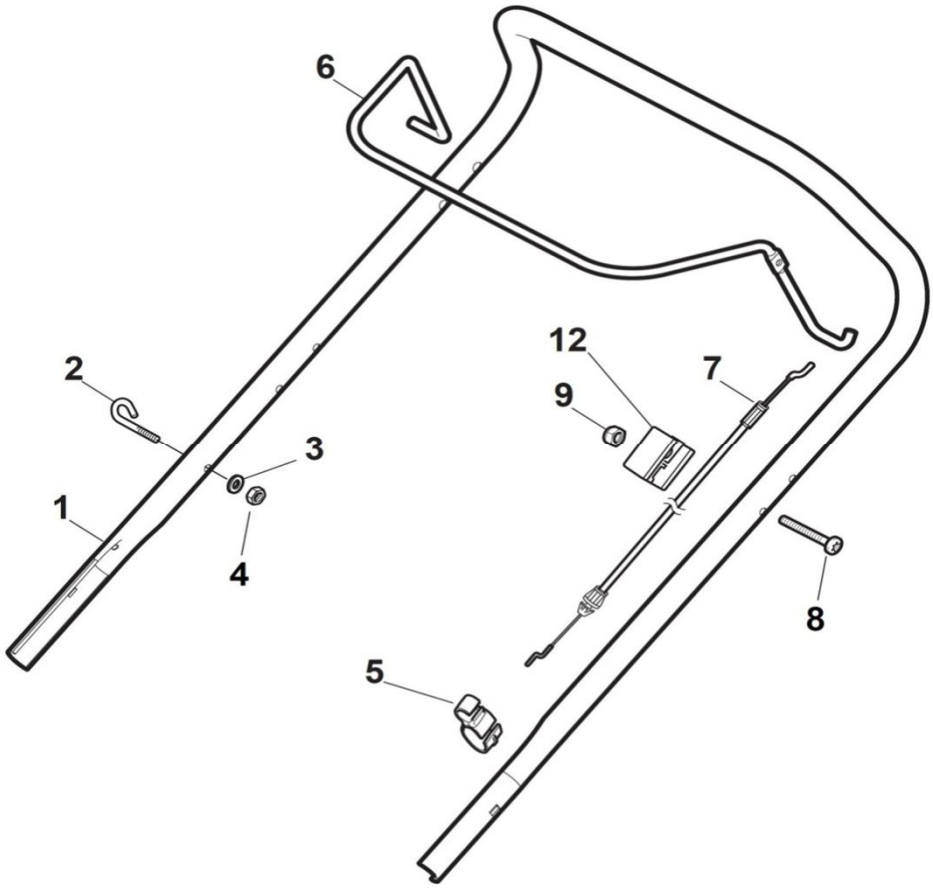

No	Code	Name	Qty	No	Code	Name	Qty
1		Handle, Upper Part with sponge handgrip	1				
2		Guide Spring	1				
3		Washer	1				
4		Nut	1				
5		Conduit Clip Caproeurope (28-1495)	1				
6	044739	Lever, Engine Brake Black	1				
7	042476	Cable, Thread Engine Brake	1				
8		Screw	1				
9		Nut	1				
12	042477	Plate	1				

EXPLODED PARTS LIST

Year: 2016

V 460 P

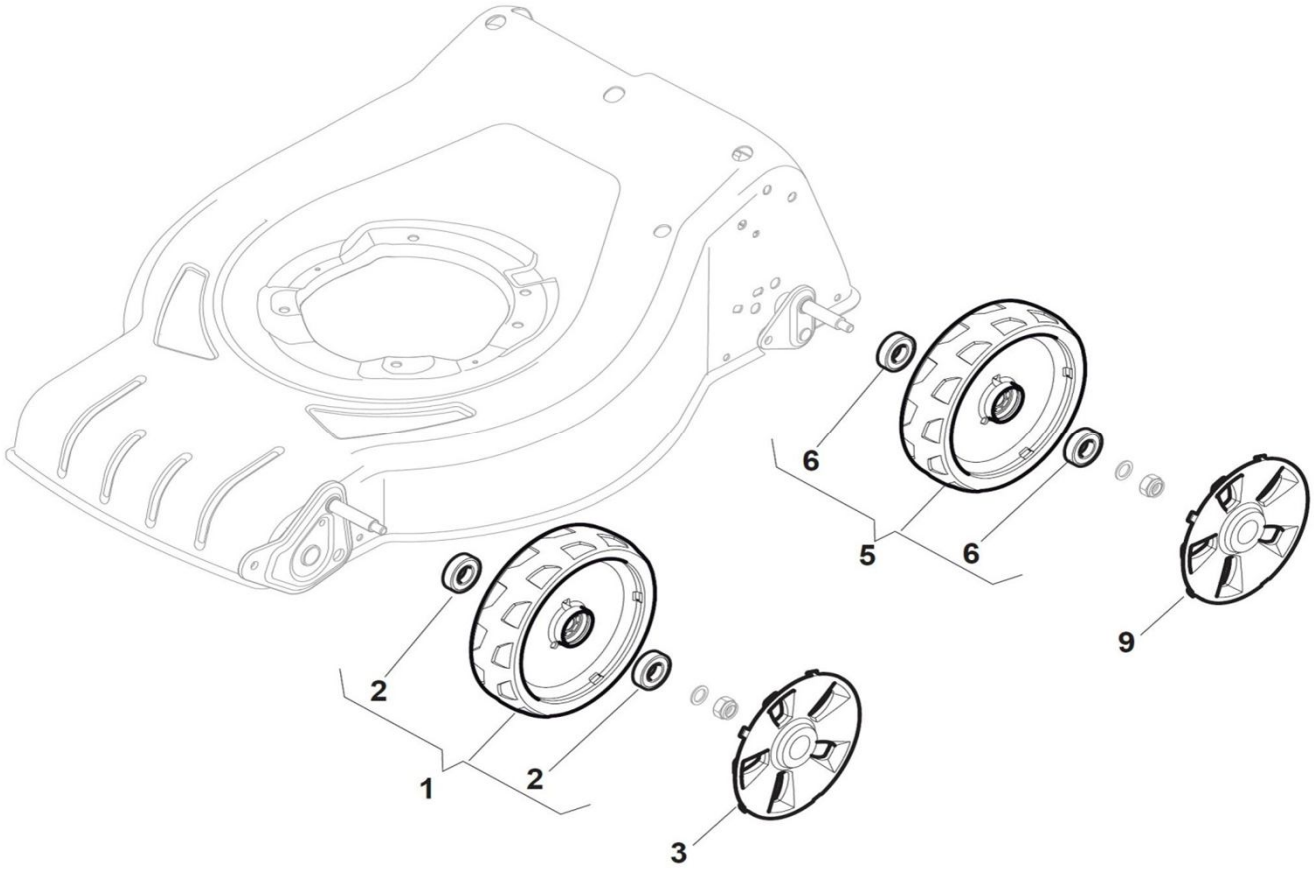

No	Code	Name	Qty	No	Code	Name	Qty
1	046469	Wheel	2				
2	042478	Bearing	4				
3	042479	Hub Cap Grey	2				
5	046469	Wheel	2				
6	042478	Bearing	4				
9	042479	Hub Cap Grey	2				

EXPLODED PARTS LIST

Year: 2016

V 460 P

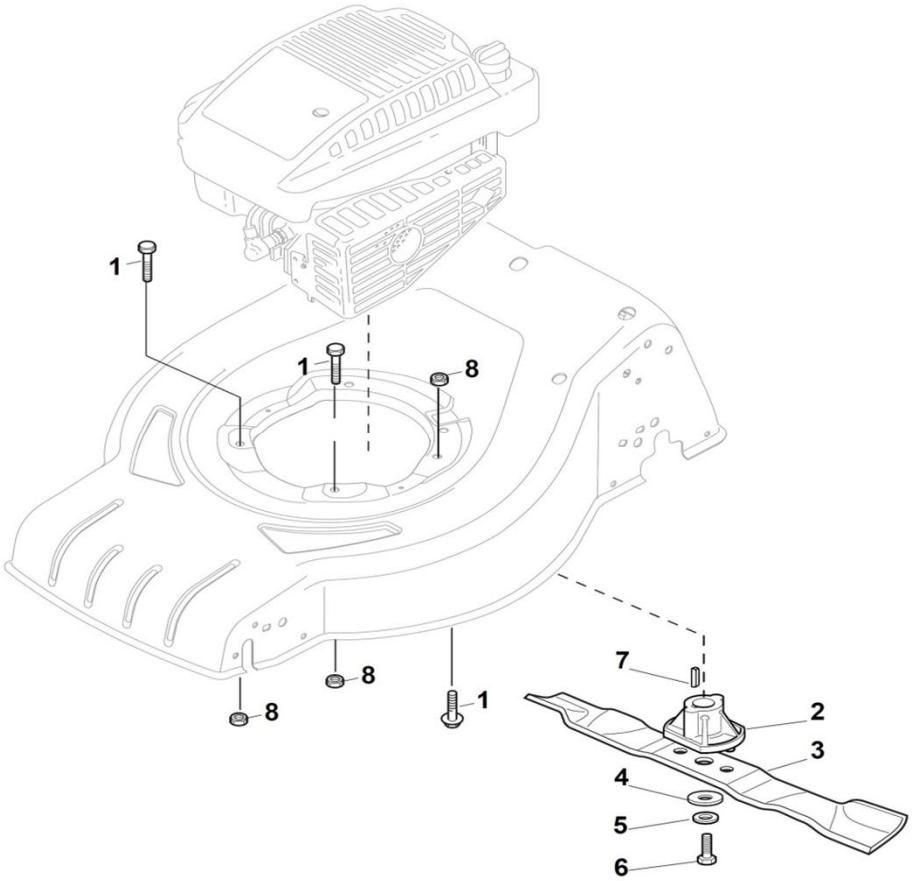

No	Code	Name	Qty	No	Code	Name	Qty
1		Screw	3				
2	042480	Hub, Crankshaft Ø 22.2	1				
3	044741	Blade	1				
4		Elastic Disc	1				
5		Washer	1				
6	042481	Screw	1				
7	042482	Feather, Crankshaft Ø 22	1				
8		Nut	3				

EXPLODED PARTS LIST

Year: 2016

V 460 P

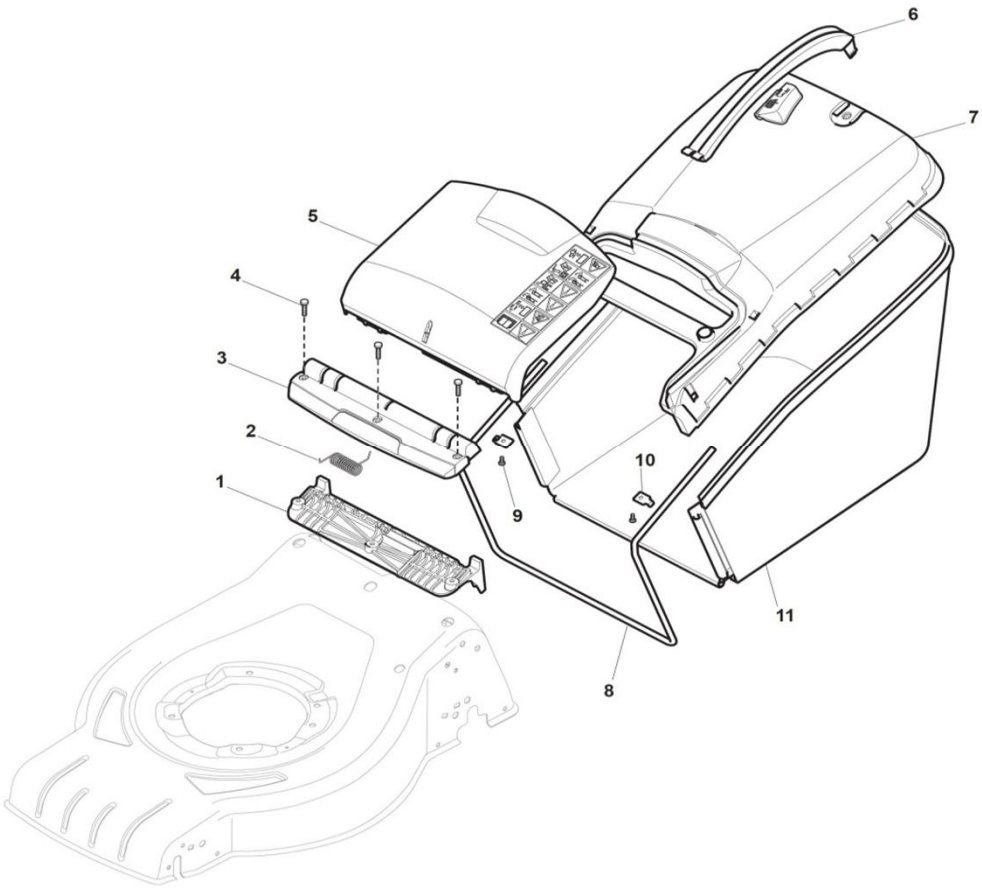

No	Code	Name	Qty	No	Code	Name	Qty
1		Black Stone Guard Support	1				
2	042483	Spring	1				
3		Stone Guard Supp. Cover Black	1				
4		Screw	3				
5		Stone Guard, Black	1				
6	042465	Handle, Black	1				
7	042484	Grass-Box, Upper Part Black	1				
8	042485	Grasscatcher Lower Stiffening Cruiser	1				
9		Screw	2				
10		Plate	2				
11	042486	Box, Fabric	1				