EXPLODED PARTS LIST

Year: 2019

PLS 10 T 2019

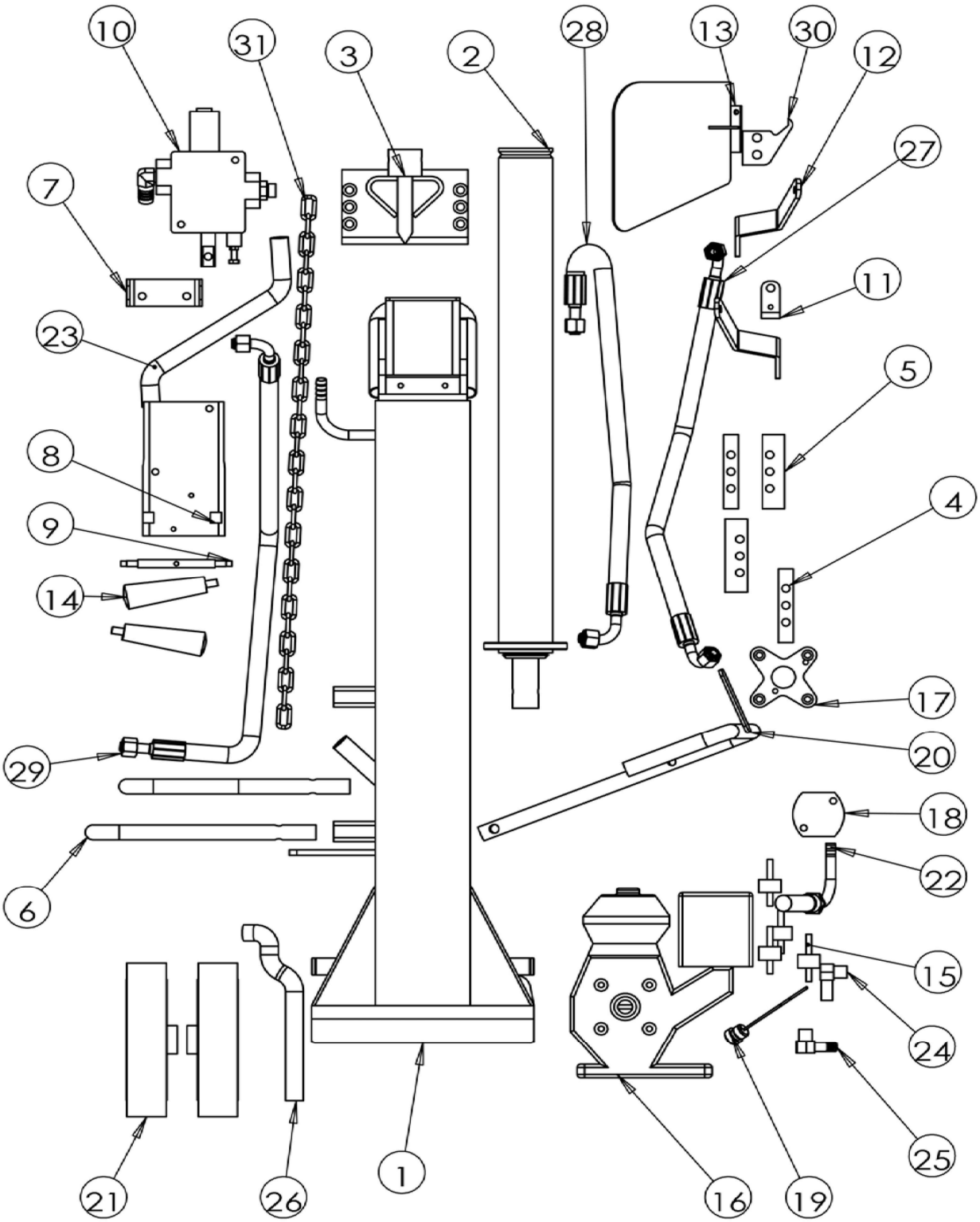

EXPLODED PARTS LIST

Year: 2019

PLS 10 T 2019

No	Code	Name	Qty	No	Code	Name	Qty
1	64721	Main work table					
2	64722	Cylindes assembly					
3	64723	Wedge					
4	64724	Guiding linen					
5	64725	Guiding support					
6	64726	Wood supporting rod					
7		Bracket					
8	64727	Valve seat					
9		Operation flat shaft					
10	64728	Valve					
11		Valve hinge					
12	64729	Operation handle					
13	64730	Safety guard					
14	64731	Plastic handle					
15	64732	Gas engine absorber					
16		Villager VGR 250H engine					
17	64733	Connector					
18	64734	Gear Pump					
19	64735	Oil level indicator					
20	64736	Wood lifting frame					
21	64737	Wheel					
22	64738	Filter					
23	64739	Return oil hose					
24	64740	NH7 connector					
25	64741	Elbow					
26	64742	Input oil hose					
27	64743	High pressure oil hose 1					
28	64744	High pressure oil hose 2					
29	64745	High presuure oil hose 3					
30		Hook					
31	64746	Chain					